PROPOSED APARTMENT COMPLEX

#12 & #14 SCHOOL STREET; EAST GRANBY, CONNECTICUT 06026

SUBMISSION FOR IWC ADMINISTRATIVE REVIEW AND TO PLANNING & ZONING COMMISSION FOR SITE PLAN APPROVAL; PROPOSED MULTI-FAMILY BUILDING, PARKING AND RELATED SITE IMPROVEMENTS IN VILLAGE CENTER "VC"-ZONE

PROJECT CONSULTANTS:

LANDSCAPE ARCHITECT:
BIFF SCHECHINGER, ASLA
ROBERT SCHECHINGER, JR. ASLA
772 FARMINGTON AVENUE
FARMINGTON, CT 06032
TEL: 860-478-7839
EMAIL: BIFF.DESIGN@SBCGLOBAL.NET

CIVIL ENGINEER:
SKIP ALFORD, L.S., P.E.
ALFORD ASSOCIATES, INC.
200 PIGEON HILL ROAD
WINDSOR, CT 06095
TEL: 860-688-7288
EMAIL: ALFORD@SNET.NET

ARCHITECT:
HANS WINKEL
DON HAMMERBERG ASSOCIATES
772 FARMINGTON AVENUE
FARMINGTON, CT 06032
TEL: 860-677-9501
EMAIL: HANS@DHA-ARCHITECTS.COM

SURVEYOR:
JERRY P. MAHER, JR. L.S.
NERIANI LAND SURVEYING, L.L.C.
56 HILLCREAST DRIVE
BARKHAMSTED, CONNECTICUT 06063
PHONE: (860) 677-7732
EMAIL: JERRY@NERIANISURVEYING.COM

SOIL / WETLAND SCIENTIST:
GEORGE T. LOGAN, MS, PWS, CSE
REMA ECOLOGICAL SERVICES, LLC
164 EAST CENTER STREET, SUITE 8
MANCHESTER, CT 06040
TEL: 860-649-7362 (7362)
FAX: 860-647-8397
EMAIL: REMA8@AOL.COM

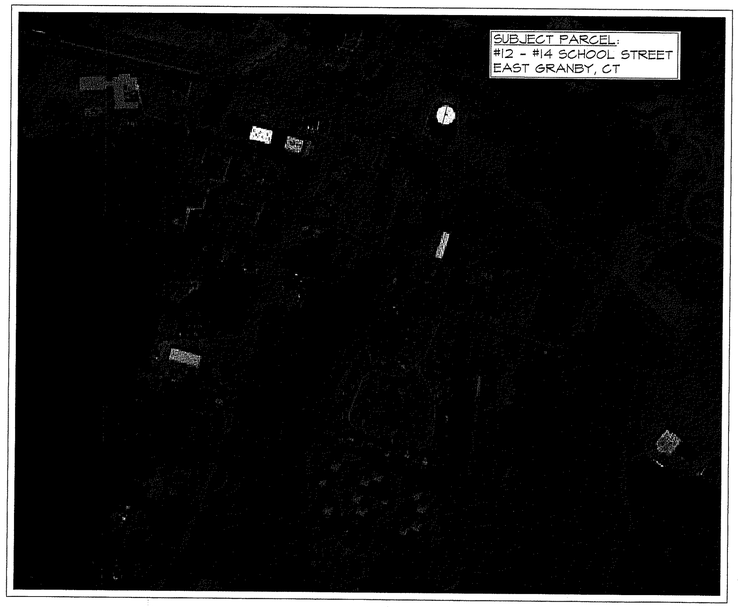

LOCATION MAP:
SCALE: 1" = 400'

ZONING & DEVELOPMENT DATA:

ZONING SCHEDULE: "VC" - VILLAGE CENTER ZONE:

ZONING REQUIREMENTS:	PROPOSED:
Min. Lot Area = 5,000 Sq. Ft.; 0.11 Ac.	138,537 Sq. Ft.; 3.18 Ac.
Max. Building Coverage = N/A	14.91%, (20,657 Sq. Ft.)
Max. Lot Coverage = 80%, (110,830 SQ. FT.)	27.90%, (38,641 Sq. Ft.)
Landscape Area = 20%; 27,707 Sq. Ft.	72.10%; 99,896 Sq. Ft.
Max. Building Height & Stories = 40' Ht.; #2-1/2 Stories	35'-1"; #2-1/2 Stories
Min. Lot Frontage = 50 L.F.	235.65 L.F.
Min. Front Yard Setback, = 20 L.F.	20.50 L.F.
Min. Side Yard Setback, = 15 L.F.	22.02 L.F.
Min. Rear Yard Setback = 15 L.F.	25.77 L.F.
Min. #1 Bedroom Floor Area = 700 Sq. Ft.	785 Sq. Ft.
Min. #2 Bedroom Floor Area = 850 Sq. Ft.	1,029 Sq. Ft.
Max. #2 Bedroom Units =50 %	50%
Site Served by MDC Water & East Granby WPCA	Yes
PARKING REQUIREMENTS:	PROPOSED:
Min. Parking Front Yard Setback = 25 L.F.	29.45 L.F.
Min. Parking Side Yard Setback = 10 L.F.	22.01 L.F.
Min. Parking Rear Yard Setback = 10 L.F.	26.51 L.F.
Min. 1 Bedroom Parking / #1 Parking Space = #20 - 1 Bdrm Unit / #20 Spaces	#22 Spaces
Min. 2 Bedroom Parking / #1.5 Parking Space = #20 - 2 Bdrm Unit / #30 Spaces	#32 Spaces
(#26 - 9' x 18' Ground Parking Spaces and #22 – 11' x 24.00' Garage Parking Spaces)	
Min. Handicap Parking Spaces = #5 Spaces	#6 Spaces
(#2 Handicap Ground Spaces & #2 Handicap Van Space Ground Parking; #2 Handicap Spaces Garage Parking)	
Min. Two-Way, Driveway Width With 90 Degree Parking = 24 L.F.	24.00 L.F.
LANDSCAPE REQUIREMENTS:	PROPOSED:
Min. Perimeter Trees - #1 Shade Tree / 50' Frontage = #34 Trees / 1,661.54' Frontage	#8 Trees*

*(*Modification Request per Section VII., Article A. Landscape Regulations, Item 4.b. – Existing Vegetation and Plant Material May Be Used To Meet All or Part of the Landscape Regulations).*

PROPOSED APARTMENT BUILDNG DATA:

Building Footprint = 19,646 Sq. Ft.
Building 2nd & 3rd Floor Area = 18,269 Sq. Ft. Each
Total Building Area = 56,184 Sq. Ft.
Total Leasable Apartment Area = 37,256 Sq. Ft. Living Space & 4,320 Sq. Ft. Porches.
Total Garage Area = 6,636 Sq. Ft., (#2 Handicap Spaces @ 370 Sq. Ft. & #22 Spaces @ 268 Sq. Ft.)
Total Area Storage = 540 Sq. Ft., (#20) Storage Units @ 27 Sq. Ft.).
Total Non-Leasable Area, Common / Utility / Amenity / Social Space = 8,911 Sq. Ft.
Total 1-Bedroom Apartment Area = 16,676 Sq. Ft. Living Space & 1,920 Sq. Ft. Porches.
(#16 1-Bedroom DU @ 785 Sq. Ft. with 90 Sq. Ft. Porch & #4 1-Bedroom DU @ 1,029 Sq. Ft. with 120 Sq. Ft. Porch)
Total 2-Bedroom Apartment Area = 20,580 Sq. Ft. Living Space & 2,400 Sq. Ft. Porches.
(#20 2-Bedroom DU @ 1,029 Sq. Ft. with 120 Sq. Ft. Porch)
(Measurement Note: Total building area and footprint were measured to exterior of walls whereas apartments, garage and common areas were measured to inside of wall).

PROPOSED PROJECT AREA DISTURBANCE:

Total Disturbed Area = 68,358 Sq. Ft.; 1.57 Acres.
Total On-Site Disturbed Area = 66,904 Sq. Ft., 1.54 Acres; (48.29% of Site).
Total Off-Site Disturbed Area = 1,454 Sq. Ft., 0.03 Acres

DATE: 25 OCTOBER 2023
REVISED:

DRAWING TABLE OF CONTENTS:

SITE DRAWINGS:
SHEET C.1: COVER SHEET
SHEET S.1: PROPERTY & TOPOGRAPHIC SURVEY
SHEET L.1: EXISTING CONDITIONS / DEMOLITION PLAN
SHEET L.2: SITE PLAN
SHEET L.3: LAYOUT PLAN
SHEET L.4: GRADING / DRAINAGE PLAN
SHEET L.5: S & E CONTROL / UTILITY PLAN
SHEET L.6: LANDSCAPE PLAN
SHEET L.7: LIGHTING & PHOTOMETRIC PLAN
SHEET L.8: SITE DETAILS & GENERAL NOTES
SHEET L.9: SITE DETAILS & GENERAL NOTES
SHEET L.10: SITE DETAILS & GENERAL NOTES
SHEET L.11: SITE DETAILS & GENERAL NOTES
SHEET L.12: SITE DETAILS & GENERAL NOTES
SHEET L.13: SITE RENDERING

ARCHITECTURAL DRAWINGS:
SHEET A-1: BUILDING ELEVATIONS
SHEET A-2: BUILDING FLOOR PLANS

PERMIT - WETLANDS REGULATED ACTIVITY:
I hereby certify that at a meeting on_____ the East Granby Conservation Commission gave final approval to this Plan to conduct Regulated Wetland Activity in accordance with the East Granby Inland Wetlands and Watercourses Regulations.
Chairman Date Signed
In accordance Section 11.5.1 or the Regulations, all work in connection with this Permit shall expire unless activity has been initiated by _____ (One Year from the Date of Approval).
In accordance with Section 11.4.2 all work in connection with this Permit shall be completed by _____ (Five Years from date of Approval). In accordance with Section 11.4.2 the time period within which the Regulated Activity shall be conducted is limited to _____
Received for filing on _____ by _____ Town Clerk

SITE PLAN APPROVAL:
I hereby certify that at a meeting on_____the East Granby Planning & Zoning Commission approved this Site Plan in accordance with the East Granby Zoning Regulations.
Chairman: Date Signed:
In accordance with Section X.A.2.h of the Zoning Regulations, work in connection with this Site Plan shall begin by _____ (18 months of the date of approval).
In accordance with CGS 8-3 (i), all work in connection with this Site Plan shall be completed by _____ (five yea of the date of approval).
Received at the Planning & Zoning Office on by _____ Title:_____

SPECIAL PERMIT APPROVAL:
I hereby certify that at a meeting on , the East Granby Planning & Zoning Commission approved a Special Permit in accordance with Section of the East Granby Zoning Regulations.
Chairman: Date Signed_____
In accordance with Section X.A.1.f. of the Zoning Regulations, this Special Permit shall expire on _____ (12 months of the date of approval) unless the authorized Special Permit activity has begun or unless an extension of time has been granted by the Commission.
In accordance with CGS 8-3d, any Special Permit shall be recorded in the Land Records.

Seal:

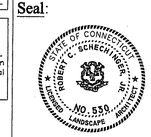

Prepared By:
Robert C. Schechinger, Jr. ASLA
772 Farmington Avenue
Farmington, CT 06032
Telephone: (860) 478 - 7839
Email: Biff.Design@sbcglobal.net
Website: BiffLandDesign.com

Sheet No.
C.1

12 SCHOOL STREET, LLC

399 LEDYARD STREET, UNIT #12-S; HARTFORD, CT 06114

COVER: C.1

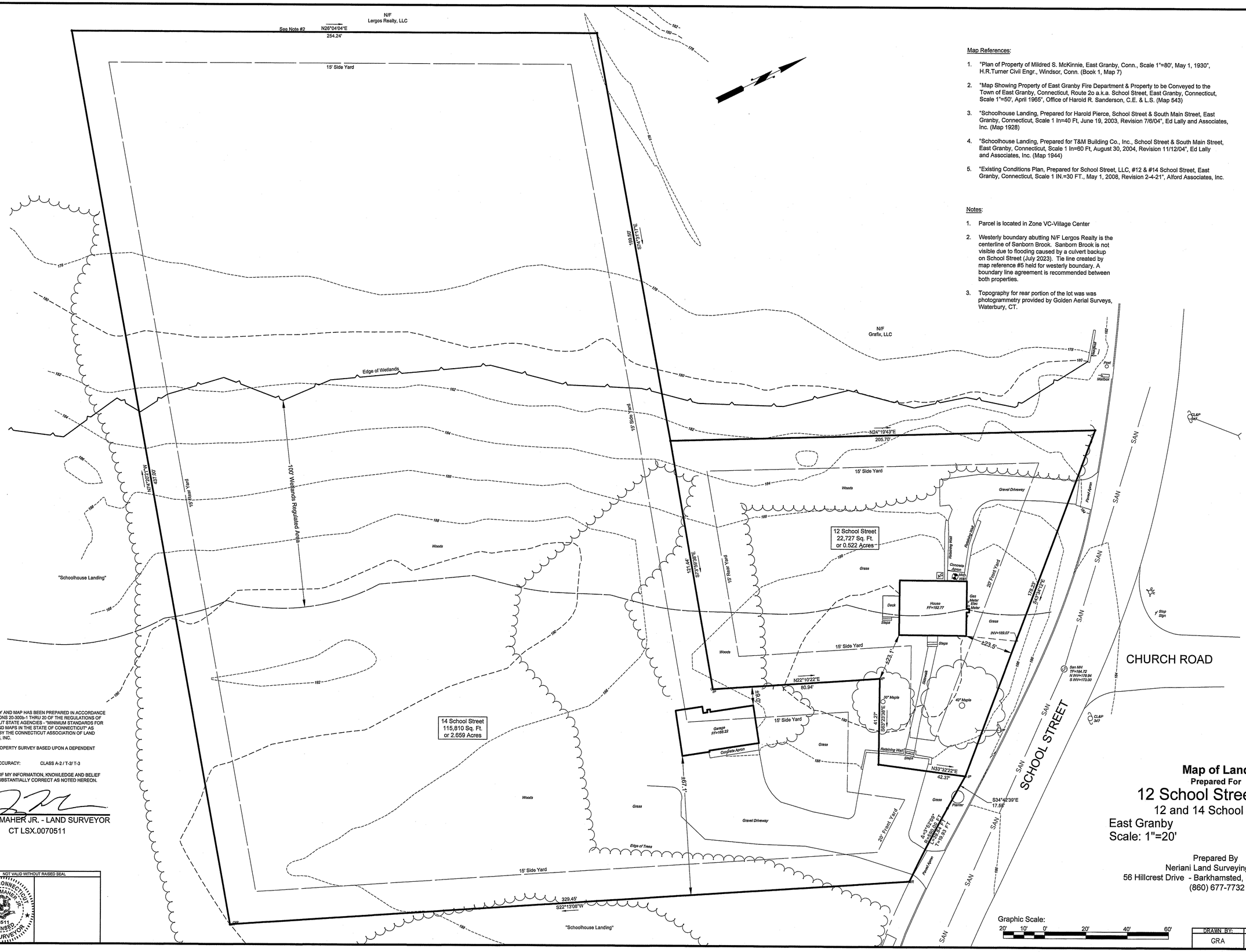

Map References:

1. "Plan of Property of Mildred S. McKinnie, East Granby, Conn., Scale 1"=80', May 1, 1930", H.R.Turner Civil Engr., Windsor, Conn. (Book 1, Map 7)
2. "Map Showing Property of East Granby Fire Department & Property to be Conveyed to the Town of East Granby, Connecticut, Route 2o a.k.a. School Street, East Granby, Connecticut, Scale 1"=50', April 1965", Office of Harold R. Sanderson, C.E. & L.S. (Map 543)
3. "Schoolhouse Landing, Prepared for Harold Pierce, School Street & South Main Street, East Granby, Connecticut, Scale 1 In=40 Ft, June 19, 2003, Revision 7/6/04", Ed Lally and Associates, Inc. (Map 1928)
4. "Schoolhouse Landing, Prepared for T&M Building Co., Inc., School Street & South Main Street, East Granby, Connecticut, Scale 1 In=60 Ft, August 30, 2004, Revision 11/12/04", Ed Lally and Associates, Inc. (Map 1944)
5. "Existing Conditions Plan, Prepared for School Street, LLC, #12 & #14 School Street, East Granby, Connecticut, Scale 1 IN.=30 FT., May 1, 2008, Revision 2-4-21", Alford Associates, Inc.

Notes:

1. Parcel is located in Zone VC-Village Center
2. Westerly boundary abutting N/F Lergos Realty is the centerline of Sanborn Brook. Sanborn Brook is not visible due to flooding caused by a culvert backup on School Street (July 2023). Tie line created by map reference #5 held for westerly boundary. A boundary line agreement is recommended between both properties.
3. Topography for rear portion of the lot was was photogrammetry provided by Golden Aerial Surveys, Waterbury, CT.

THIS SURVEY AND MAP HAS BEEN PREPARED IN ACCORDANCE WITH SECTIONS 20-300b-1 THRU 20 OF THE REGULATIONS OF CONNECTICUT STATE AGENCIES - "MINIMUM STANDARDS FOR SURVEYS AND MAPS IN THE STATE OF CONNECTICUT" AS ENDORSED BY THE CONNECTICUT ASSOCIATION OF LAND SURVEYORS, INC.

THIS IS A PROPERTY SURVEY BASED UPON A DEPENDENT RESURVEY.

CLASS OF ACCURACY: CLASS A-2 / T-2/ T-3

TO THE BEST OF MY INFORMATION, KNOWLEDGE AND BELIEF THIS MAP IS SUBSTANTIALLY CORRECT AS NOTED HEREON.

JERRY P. MAHER JR. - LAND SURVEYOR
CT LSX.0070511

NOT VALID WITHOUT RAISED SEAL

STATE OF CONNECTICUT
JERRY P. MAHER JR.
70511
LICENSED
LAND SURVEYOR

Map of Land

Prepared For

12 School Street, LLC

12 and 14 School Street

East Granby — Connecticut

Scale: 1"=20' — July 19, 2023

Prepared By
Neriani Land Surveying, LLC
56 Hillcrest Drive - Barkhamsted, Connecticut 06063
(860) 677-7732

Graphic Scale: 20' 10' 0' 20' 40' 60'

DRAWN BY:	CHECKED BY:	JOB NO.
GRA	JPM	23-42

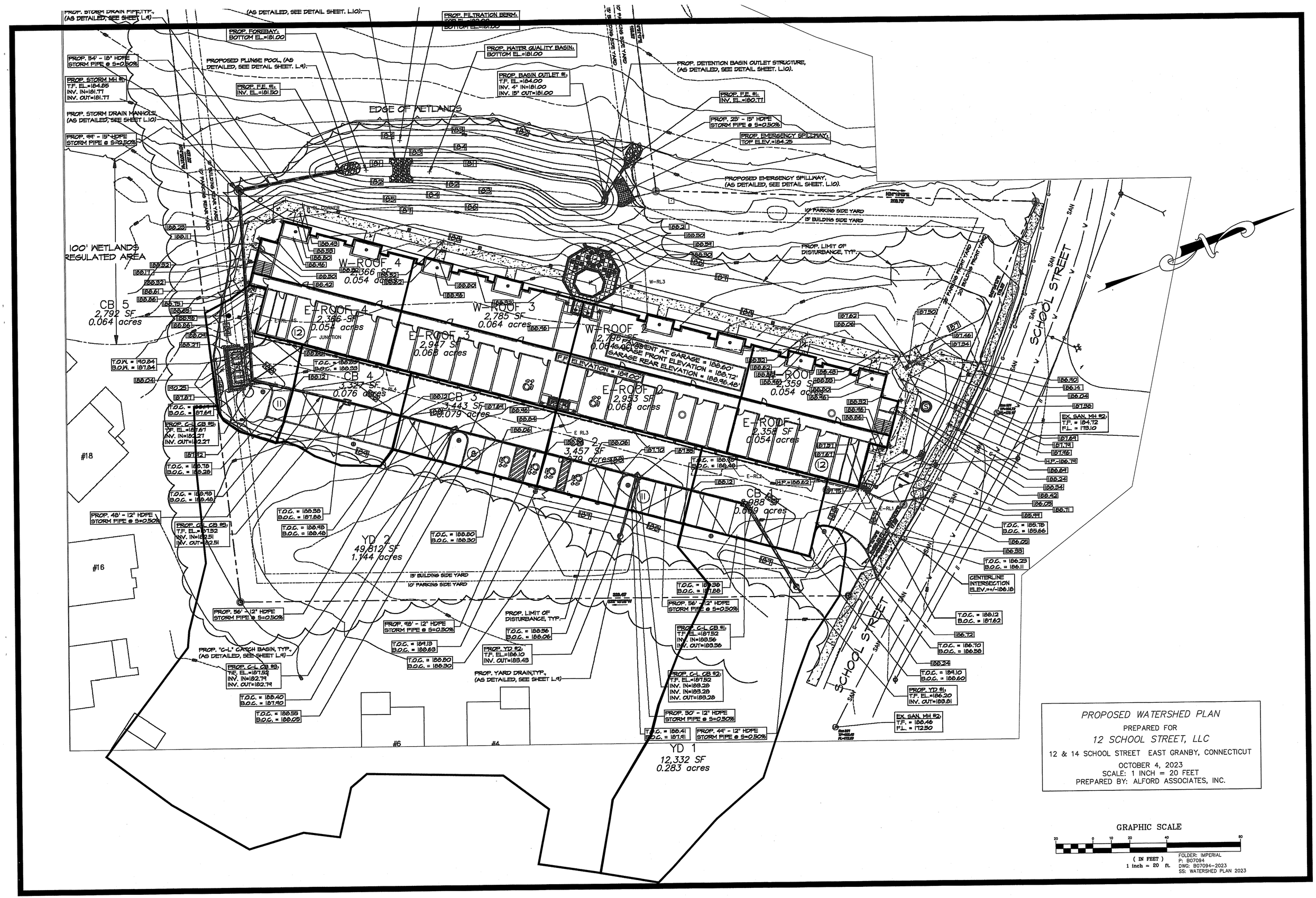

PROPOSED WATERSHED PLAN

PREPARED FOR

12 SCHOOL STREET, LLC

12 & 14 SCHOOL STREET EAST GRANBY, CONNECTICUT

OCTOBER 4, 2023

SCALE: 1 INCH = 20 FEET

PREPARED BY: ALFORD ASSOCIATES, INC.

GRAPHIC SCALE

20 0 10 20 40 80

(IN FEET)
1 inch = 20 ft.

FOLDER: IMPERIAL
P: B07094
DWG: B07094-2023
SS: WATERSHED PLAN 2023

PROPOSED SITE DEMOLITION DATA:

TOTAL PARCEL AREA = 138,537 SQ. FT., (3.18 AC.)

TOTAL PARCEL IMPERVIOUS AREA REMOVED = 8,076 SQ. FT., (5.83%)
BUILDING AREA TO BE REMOVED = 1,600 SQ. FT.; (1.15%)
CONCRETE SIDEWALK & PAD TO BE REMOVED = 323 SQ. FT., (0.23%)
WOODED DECK & STEPS TO BE REMOVED = 90 SQ. FT., (0.07%)
BITUMINOUS PAVEMENT APRONS TO BE REMOVED* = 257 SQ. FT., (0.19%)
PROCESSED GRAVEL / STONE TO BE REMOVED** = 5,806 SQ. FT., (4.19%)

*POTENTIAL RE-PURPOSED BITUMINOUS PAVEMENT AREA.
**POTENTIAL RE-PURPOSED PROCESS STONE AREA.

TOTAL PARCEL WETLAND AREA = 42,913 SQ. FT., (31%)
TOTAL WETLANDS DISTURBED = 0.00 SQ. FT.

REUSE OF DEMOLITION MATERIALS GENERAL NOTE:

EXISTING BITUMINOUS PAVEMENT LOT AND PROCESS AGGREGATE / BROKEN STONE AREA TO BE REMOVED MAY BE TESTED AND APPROVED FOR MILLINGS, BASE AND SUB-BASE MATERIALS. THESE APPROVED MATERIALS SHALL BE STOCK-PILED ON SITE FOR RE-INSTALLATION UNDER PROPOSED PARKING AND DRIVE-WAY PAVEMENT AREAS, AS SPECIFIED. APPROVED MATERIAL SHALL BE STOCKPILED ON SITE AND SECURED BY PERIMETER SILT FENCE AND / OR OTHER S & E CONTROL MEASURES, (AS NOTED, SEE S & E CONTROL / UTILITY PLAN, SHEET L.5).

SITE DEMOLITION GENERAL NOTES:

1.) A Pre-Construction Meeting with applicable Town Staff, Owner and Owner's Representatives, shall be required of the Contractor, to field review all approved site demolition activities.
2.) Stake Limits of Demolition Disturbance as proposed and install all applicable peripheral Sedimentation and Erosion Controls and other requisite safety measures as detailed and per applicable State and Federal Regulations. Additional measures and controls, if needed due to unanticipated / evolved site conditions, shall be installed by the Contractor, as directed by Owner, applicable Town Staff and / or Owner's Representatives, as necessary, throughout the duration of demolition activity.
3.) All demolition activities shall be preformed by licensed professionals, to the extent and manner specified by applicable Local, State and Federal Agencies. The Contractor is responsible for the verification and maintenance of qualifications and associated certifications and / or insurance documents required of demolition experts for the legal and safe execution of all proposed demolition activity, as represented within these approved documents.
4.) All materials designated for removal shall be thoroughly excavated and / or dismantled, as required, and shall be disposed of in a legal manner off site by the Contractor, unless otherwise previously directed by Owner, applicable Town Staff and / or Owner's Representatives. The Contractor is responsible for acquiring and maintaining all applicable Local, State and Federal permits for the deposition of materials off-site, as required, for the duration of that activity.
5.) All materials designated for potential relocation and / or adaptive reuse shall be thoroughly evaluated by the Contractor for structural and / or functional suitability by appropriate professionals to the standards and criteria specified herein. These materials evaluations will be subsequently submitted for review and approval to the Owner, applicable Town Staff and / or Owner's Representatives, to prior to their proposed reuse on site in the completion of the approved development activity.
6.) Suitable materials not immediately utilized in on-going construction activities, shall be stockpiled in designated areas installed with all requisite Sedimentation and Erosion Controls and other safety measures, pursuant to Item # 2 above. All unsuitable materials shall be disposed of in a legal manner off site by the Contractor, unless otherwise previously directed by Owner, applicable Town Staff and / or Owner's Representatives, pursuant to Item # 4. above.
7.) All utilities systems designated for removal and / or discontinuation shall be done so in the requisite legal manner and to the applicable criteria and performance standards of the appropriate Utility Company and various Regulatory Agencies governing such activity. The acquisition and maintenance of all permits, licenses and / or professional handling required by these specific activities are the responsibility of the Contractor, unless otherwise directed by Owner, applicable Town Staff and / or Owner's Representatives, to prior to commencement of these activities.
8.) After demolition / discontinuation of appropriate material or utility system, carefully back fill and compact, as specified, around all proposed site improvements and utilities, until sub-grade is reached below topsoil course in lawn and planting areas, and sub-base course is reached under paved areas or other structural site improvements, as detailed in these Drawings.
9.) Stabilize all finish grades with the appropriate materials, to the lines and grades detailed on the Drawings, and as specified.

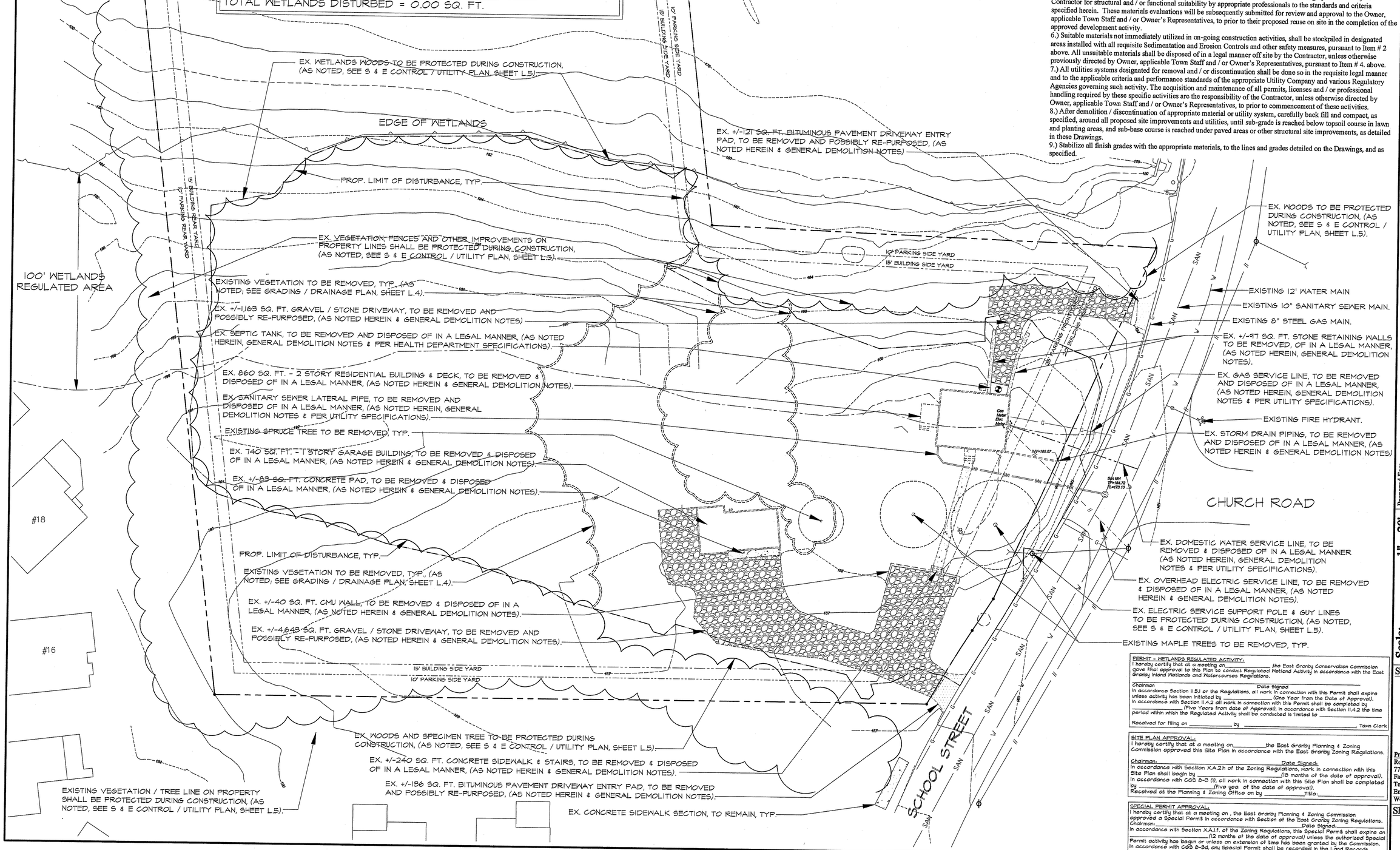

PERMIT - WETLANDS REGULATED ACTIVITY:
I hereby certify that at a meeting on _____ the East Granby Conservation Commission gave final approval to this Plan to conduct Regulated Wetland Activity in accordance with the East Granby Inland Wetlands and Watercourses Regulations.
Chairman _____ Date Signed _____
In accordance Section 11.5.1 or the Regulations, all work in connection with this Permit shall expire unless activity has been initiated by _____ (One Year from the Date of Approval).
In accordance with Section 11.4.2 all work in connection with this Permit shall be completed by _____ (Five Years from date of Approval), in accordance with Section 11.4.2 the time period within which the Regulated Activity shall be conducted is limited to _____
Received for filing on _____ by _____ Town Clerk

SITE PLAN APPROVAL:
I hereby certify that at a meeting on _____ the East Granby Planning & Zoning Commission approved this Site Plan in accordance with the East Granby Zoning Regulations.
Chairman: _____ Date Signed: _____
In accordance with Section X.A.2h of the Zoning Regulations, work in connection with this Site Plan shall begin by _____ (18 months of the date of approval).
In accordance with CGS 8-3 (i), all work in connection with this Site Plan shall be completed by _____ (five yea of the date of approval).
Received at the Planning & Zoning Office on by _____ Title: _____

SPECIAL PERMIT APPROVAL:
I hereby certify that at a meeting on , the East Granby Planning & Zoning Commission approved a Special Permit in accordance with Section of the East Granby Zoning Regulations.
Chairman _____ Date Signed _____
In accordance with Section X.A.1.f. of the Zoning Regulations, this Special Permit shall expire on _____ (12 months of the date of approval) unless the authorized Special Permit activity has begun or unless an extension of time has been granted by the Commission.
In accordance with CGS 8-3d, any Special Permit shall be recorded in the Land Records.

Drawing Title:
Proposed Apartment Facility:
#12 & #14 School Street; East Granby, Connecticut 06026
EXISTING CONDITIONS & DEMOLITION PLAN

Prepared For:
12 SCHOOL STREET, LLC
399 LEDYARD STREET, UNIT #12-S;
HARTFORD, CT 06114

Scale: 1" = 20'
0' 10' 20' 30' 40' 60'

Date: 25 October 2023
Revisions:

Seal:
STATE OF CONNECTICUT ROBERT C. SCHECHINGER JR. LICENSED LANDSCAPE ARCHITECT No. 539

Prepared By:
Robert C. Schechinger, Jr. ASLA
772 Farmington Avenue
Farmington, CT 06032
Telephone: (860) 478 - 7839
Email: BiffDesign@sbcglobal.net
Website: BiffLandDesign.com

Sheet No.
L.1

PROPOSED DETENTION / WATER QUALITY BASIN, (AS NOTED, SEE GRADING / DRAINAGE SHEET. L.4).

PROPOSED STONE FILTRATION BERM, (AS DETAILED, SEE DETAIL SHEET. L.4).

PROPOSED DETENTION BASIN FORE-BAY, (AS NOTED, SEE GRADING / DRAINAGE SHEET. L.4).

PROPOSED PLUNGE POOL, (AS NOTED, SEE GRADING / DRAINAGE SHEET. L.4).

PROP. FLARED END SECTION, (AS NOTED, SEE GRADING / DRAINAGE SHEET. L.4).

PROP. REVISED WOODS TREE LINE, TYP.

PROP. LIMIT OF DISTURBANCE, TYP.

PROP. STORM DOWNSPOUT, TYP., (AS NOTED, SEE GRADING / DRAINAGE SHEET. L.4).

PROP. LED BOLLARD PATH LIGHT, (AS NOTED, SEE PHOTOMETRIC PLAN, SHEET L.7).

PROP. STORM MANHOLE, TYP., (AS NOTED, SEE GRADING / DRAINAGE SHEET. L.4).

PROPOSED WOODS TO BE REMOVED, TYP.

PROP. 6' HIGH, #21 - 6' VINYL PRIVACY FENCE SECTIONS, TYP., (AS DETAILED, SEE SHEET L.9).

100' WETLANDS REGULATED AREA

PROPOSED #40 UNIT - 2-1/2 STORY APARTMENT FACILITY, (SEE ARCHITECTURE BUILDING PLANS SHEET A-1 & BUILDING ELEVATIONS, SHEET A-2).

PROP. 5' X 6' CONCRETE HANDICAP ACCESSIBLE, HAUNCHED CURB CUT RAMP W/ TACTILE WARNING STRIP, (AS DETAILED, SEE SHEET L.8).

PROP. CMU REINFORCED GRAVITY RETAINING WALL, (AS DETAILED, SEE SHEET L.9).

PROP. CONCRETE DUMPSTER PAD FOR RECYCLING & REFUSE, WITH 6' HT. VINYL FENCE ENCLOSURE, 6' HT. - 5' DOUBLE HUNG CHAIN LINK GATES W/ VINYL FENCE SLATS, AND VEHICLE PROTECTION BOLLARDS, (AS DETAILED, SEE SHEET L.9).

PROPOSED PARKING SPACE COUNT, TYP.

PROP. RECESSED, LED DOWN LIGHTS AT UNIT GARAGES, TYP., (AS NOTED, SEE PHOTOMETRIC PLAN, SHEET L.7).

PROP. "C-L" CATCH BASIN, TYP., (AS DETAILED, SEE SHEET L.9).

PROP. 16' HT., POLE-MOUNTED, LED AREA LIGHT, (AS NOTED, SEE PHOTOMETRIC PLAN, SHEET L.7).

PROP. 6" BITUMINOUS DRIVEWAY CURB, (AS DETAILED, SEE SHEET L.8).

PROPOSED STANDARD 9' X 18', 90 DEGREE PARKING SPACES, TYP., (AS NOTED, SEE LAYOUT PLAN, SHEET L.3).

PROP. MODEL 3704 EVSE DUAL UNIT, TYPE #2 ELECTRIC VEHICLE CHARGING UNIT W/ TWO CHARGING CABLES, TYP., (AS NOTED, SEE S & E CONTROL / UTILITY PLAN SHEET L.5).

PROP. HANDICAP VAN PARKING SIGN, (AS DETAILED, SEE SHEET L.9).

PROP. 8' X 18' HANDICAP VAN PARKING SPACES W/ 8' X 18' AISLE, (AS NOTED, SEE LAYOUT PLAN, SHEET L.3).

PROP. STANDARD HANDICAP PARKING SIGN, (AS DETAILED, SEE SHEET L.9).

PROP. #2 -10' X 18' STANDARD HANDICAP PARKING SPACES W/ 5' X 18' AISLE, (AS NOTED, SEE LAYOUT PLAN, SHEET L.3).

EX. TREE LINE, TO BE PROTECTED, TYP., (AS DETAILED, SEE SHEET L.8).

PROP. LIMIT OF DISTURBANCE, TYP.

PROP. FLARED END SECTION, (AS NOTED, SEE GRADING / DRAINAGE SHEET. L.4).

PROPOSED PLUNGE POOL, (AS NOTED, SEE GRADING / DRAINAGE SHEET. L.4).

PROPOSED EMERGENCY SPILLWAY, (AS NOTED, SEE GRADING / DRAINAGE SHEET. L.4).

PROP. DETENTION BASIN OUTLET STRUCTURE, (AS NOTED, SEE GRADING / DRAINAGE SHEET. L.4).

PROP. LOUVERED LED BOLLARD PATH LIGHT, TYP., (AS NOTED, SEE PHOTOMETRIC PLAN, SHEET L.7).

PROP. ORNAMENTAL TERRACE W/ SEATING, GRILLS & FIRE TABLES, (AS DETAILED, SEE DETAIL SHEET L.11).

PROP. 5' WIDE CONCRETE PEDESTRIAN SIDEWALK, TYP., (AS DETAILED, SEE SHEET L.8).

PROP. REVISED WOODS TREE LINE, TYP.

EDGE OF WETLANDS

15' BUILDING SIDE YARD

10' PARKING SIDE YARD

15' BUILDING REAR YARD

10' PARKING REAR YARD

WEST WING

STORAGE ROOMS

GARAGE PARKING

ATRIUM

EAST WING

GARAGE PARKING

STORAGE ROOMS

15' BUILDING SIDE YARD

10' PARKING SIDE YARD

PROP. PAVEMENT UTILITY SAW CUT, (AS NOTED, SEE S & E CONTROL / UTILITY PLAN SHEET L.5).

EX. TREE LINE, TO BE PROTECTED, TYP., (AS DETAILED, SEE SHEET L.8).

PROP. 8" D.I. WATER MAIN, (AS NOTED, SEE S & E CONTROL / UTILITY PLAN SHEET L.5).

PROP. 8" SANITARY SEWER LATERAL, (AS NOTED, SEE S & E CONTROL / UTILITY PLAN SHEET L.5).

PROP. SANITARY MANHOLE, (AS NOTED, SEE S & E CONTROL / UTILITY PLAN SHEET L.5).

PROP. 6" D.I. FIRE SUPPRESSION SERVICE, LINE, (AS NOTED, SEE S & E CONTROL / UTILITY PLAN SHEET L.5).

PROP. 4" COPPER DOMESTIC WATER SERVICE (AS NOTED, SEE S & E CONTROL / UTILITY PLAN SHEET L.5).

PROP. #4 BAY BICYCLE RACK AND CONC. PAD, (AS DETAILED, SEE SHEET L.11).

PROP. ELECTRIC TRANSFORMER, (AS NOTED, SEE S & E CONTROL / UTILITY PLAN SHEET L.5).

PROP. 8" SANITARY SEWER LATERAL CLEAN OUT , (AS NOTED, SEE S & E CONTROL / UTILITY PLAN SHEET L.5).

10' PARKING SIDE YARD

15' BUILDING SIDE YARD

PROP. UNDERGROUND ELECTRIC SERVICE CONDUIT, (AS NOTED, SEE S & E CONTROL / UTILITY PLAN SHEET L.5).

25' PARKING FRONT YARD

25' BUILDING FRONT YARD

EX. 8" STEEL GAS MAIN.

EX. FIRE HYDRANT, (TO REMAIN).

EX. 12" D.I. MDC WATER MAIN.

EX. WPCA 10" SANITARY SEWER.

EX. SANITARY SEWER MANHOLE: TF=184.72; FL=173.10.

SAW CUT & PATCH EX. PAVEMENT, FOR UTILITY CONNECTIONS (AS DETAILED, SEE SHEET L.9).

EX. POWER LINE SUPPORT POLE & GUY WIRE, (TO BE PROTECTED DURING CONSTRUCTION WORK.

PROP. SIAMESE FDC COUPLING, (AS NOTED, SEE S & E CONTROL / UTILITY PLAN, SHEET L.5).

PROP. FACILITY FREE-STANDING SIGN W/ SPOT LIGHTS, (AS DETAILED, SEE SHEET L.12).

PROP. 5' X 6' CONCRETE HANDICAP ACCESSIBLE, HAUNCHED CURB CUT RAMP W/ TACTILE WARNING STRIP, (AS DETAILED, SEE SHEET L.8).

PROP. 5' CONC. DRIVEWAY APRON SIDEWALK SECTION, TYP., (AS DETAILED, SEE SHEET L.8).

SAW CUT & PATCH EX. PAVEMENT AND CURB FOR NEW DRIVEWAY SIDEWALK, (AS DETAILED, SEE SHEET L.9).

PROP. 4" BITUMINOUS DRIVEWAY / PARKING LOT PAVEMENT, (AS DETAILED, SEE SHEET L.8).

PROPOSED YARD DRAIN, TYP., (AS DETAILED, SEE SHEET L.9).

PROPOSED STOP SIGN, (AS DETAILED, SEE SHEET L.9).

PROP. 6" PAINTED STOP BAR.

SCHOOL STREET

Gas MH TF=184.72 FL=173.10

Gas MH TF=188.48 FL=172.60

PARKING LOT AREA USE PROHIBITION NOTE: PARKING AREA IS FOR PARKING ONLY. BASKETBALL HOOPS, STORAGE OF COMMERCIAL AND / OR UNREGISTERED VEHICLES IS PROHIBITED.

PROPOSED UTILITY LEGEND:

(S)	SANITARY SEWER SERVICE PIPE
(E)	SANITARY SEWER SERVICE PIPE
(DW)	DOMESTIC WATER SERVICE LINE
(FP)	FIRE PROTECTION SERVICE LINE
(ML)	WATER SERVICE MAIN LATERAL

PERMIT - WETLANDS REGULATED ACTIVITY:
I hereby certify that at a meeting on _____ the East Granby Conservation Commission gave final approval to this Plan to conduct Regulated Wetland Activity in accordance with the East Granby Inland Wetlands and Watercourses Regulations.

Chairman _____ Date Signed _____
In accordance Section 11.5.1 or the Regulations, all work in connection with this Permit shall expire unless activity has been initiated by _____ (One Year from the Date of Approval).
In accordance with Section 11.4.2 all work in connection with this Permit shall be completed by _____ (Five Years from date of Approval), in accordance with Section 11.4.2 the time period within which the Regulated Activity shall be conducted is limited to _____

Received for filing on _____ by _____, Town Clerk

SITE PLAN APPROVAL:
I hereby certify that at a meeting on _____ the East Granby Planning & Zoning Commission approved this Site Plan in accordance with the East Granby Zoning Regulations.

Chairman _____ Date Signed: _____
In accordance with Section X.A.2.h of the Zoning Regulations, work in connection with this Site Plan shall begin by _____ (18 months of the date of approval).
In accordance with CGS 8-3 (i), all work in connection with this Site Plan shall be completed by _____ (five yea of the date of approval).
Received at the Planning & Zoning Office on by _____ Title: _____

SPECIAL PERMIT APPROVAL:
I hereby certify that at a meeting on , the East Granby Planning & Zoning Commission approved a Special Permit in accordance with Section of the East Granby Zoning Regulations.
Chairman: _____ Date Signed: _____
In accordance with Section X.A.1.f. of the Zoning Regulations, this Special Permit shall expire on _____ (12 months of the date of approval) unless the authorized Special Permit activity has begin or unless an extension of time has been granted by the Commission.
In accordance with CGS 8-3d, any Special Permit shall be recorded in the Land Records.

Drawing Title:
Proposed Apartment Facility:
#12 & #14 School Street; East Granby, Connecticut 06026
PRELIMINARY SITE PLAN

Prepared For:
12 SCHOOL STREET, LLC
399 LEDYARD STREET, UNIT #12-S;
HARTFORD, CT 06114

Scale: 1" = 20'
0' 10' 20' 30' 40' 60'

Date: 25 October 2023

Revisions:

Seal:
STATE OF CONNECTICUT ROBERT C. SCHECHINGER JR. LICENSED LANDSCAPE ARCHITECT No. 530

Prepared By:
Robert C. Schechinger, Jr. ASLA
772 Farmington Avenue
Farmington, CT 06032
Telephone: (860) 478 - 7839
Email: Biff.Design@sbcglobal.net
Website: BiffLandDesign.com

Sheet No.
L.2

LAYOUT GENERAL NOTES:
1.) UNLESS OTHERWISE NOTED, PARKING LOT AND ACCESS DRIVEWAY DIMENSIONS ARE TAKEN AT EDGE OF PAVEMENT AT THE CURB.
2.) UNLESS OTHERWISE NOTED, ALL PROPOSED CURBS ARE TO BE 6" CONCRETE, AS NOTED.
3.) UNLESS OTHERWISE NOTED, SIDEWALK WIDTH INCLUDES EITHER 6" RAISED OR FLUSH MONOLITHIC CURB, WHERE ABUTTING PARKING OR DRIVEWAY AREAS, AS DETAILED.

SITE DEVELOPMENT / ZONING DATA:
SITE ZONE = "VC" VILLAGE CENTER ZONE;
MULTIFAMILY USE PERMITTED W/ SITE PLAN APPROVAL,
SITE SERVED BY MDC WATER AND EAST GRANBY WPCA SEWER

TOTAL SITE AREA = 138,537 SQ. FT.; 3.18 ACRES;
12 SCHOOL STREET PARCEL AREA = 22,727 SQ. FT.; 0.522 ACRE
14 SCHOOL STREET PARCEL AREA = 115,810 SQ. FT.; 2.659 ACRES

TOTAL SITE COVERAGE AREA = 38,641 SQ. FT.; 27.90%;
(MAXIMUM COVERAGE ALLOWED = 110,830 SQ. FT., 80%)
APARTMENT BUILDING AREA = 20,657 SQ. FT.
BITUMINOUS PAVEMENT & CURB AREA = 14,046 SQ. FT.
CONCRETE SIDEWALK AREA = 2,987 SQ. FT.
CONCRETE DUMPSTER PAD = 174 SQ. FT.
ORNAMENTAL TERRACE & ENTRY AREAS = 727 SQ. FT.
CMU GRAVITY RETAINING WALL = 50 SQ. FT.

PROPOSED PARKING DATA:
TOTAL PARKING REQUIRED = #50 SPACES;
TOTAL HANDICAP PARKING REQUIRED = #5 SPACES

PROP. BUILDING - EAST WING:
#10 - 1 BEDROOM APARTMENTS = #10 SPACES
#10 - 2 BEDROOM APARTMENTS = #15 SPACES
(#12 GARAGE SPACES: #11 - +/-11.00' X 24.00' STANDARD VEHICLE SPACES & #1 - +/-15.50' X 24.00' STANDARD HANDICAP SPACE)

PROP. BUILDING - WEST WING:
#10 - 1 BEDROOM APARTMENTS = #10 SPACES
#10 - 2 BEDROOM APARTMENTS = #15 SPACES
(#12 GARAGE SPACES: #11 - +/-11.00' X 24.00' STANDARD VEHICLE SPACES & #1 - +/-15.50' X 24.00' STANDARD HANDICAP SPACE)

TOTAL PARKING PROPOSED = #54 SPACES;
TOTAL HANDICAP PARKING PROPOSED = #6 SPACES
#22 - +/-11.00' X 24.00' STANDARD GARAGE SPACES
#2 - +/-15.50' X 24.00' GARAGE HANDICAP SPACES
#26 - 9' X 18' STANDARD EXTERIOR SPACES
#2 - 10' X 18' STANDARD EXTERIOR HANDICAP SPACES W/ 5' X 18' ACCESS AISLE
#2 - 8' X 18' EXTERIOR HANDICAP VAN SPACES W/ 8' X 18' ACCESS AISLE

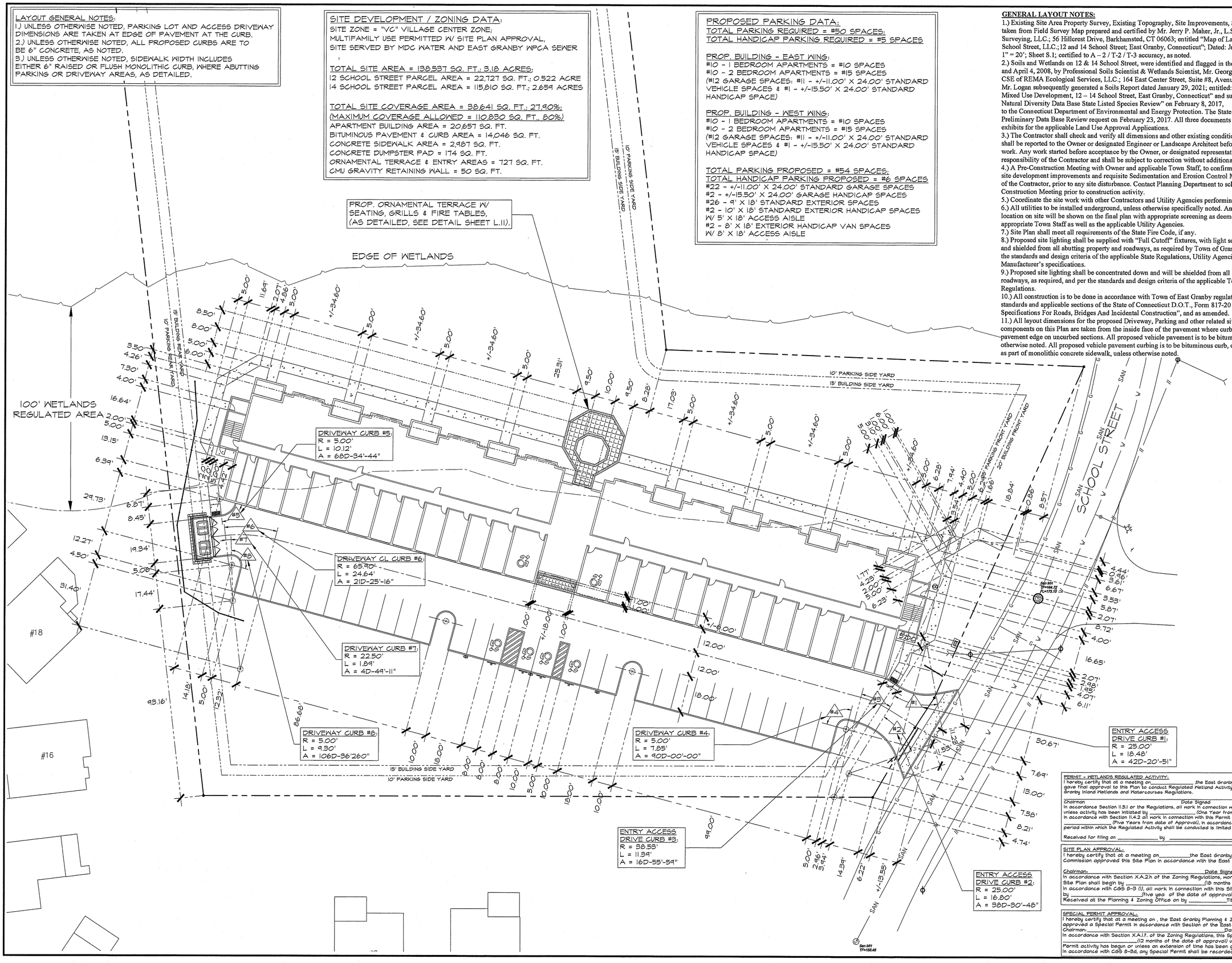

GENERAL LAYOUT NOTES:

1.) Existing Site Area Property Survey, Existing Topography, Site Improvements, Storm Drainage, Utilities, taken from Field Survey Map prepared and certified by Mr. Jerry P. Maher, Jr., L.S.; Neriani Land Surveying, LLC.; 56 Hillcrest Drive, Barkhamsted, CT 06063; entitled "Map of Land Prepared For 12 School Street, LLC.;12 and 14 School Street; East Granby, Connecticut"; Dated: July 19, 2023; Scale: 1" = 20'; Sheet S.1; certified to A – 2 / T-2 / T-3 accuracy, as noted.

2.) Soils and Wetlands on 12 & 14 School Street, were identified and flagged in the field August 8, 2007, and April 4, 2008, by Professional Soils Scientist & Wetlands Scientist, Mr. George T. Logan, MS, PWS, CSE of REMA Ecological Services, LLC.; 164 East Center Street, Suite #8, Avenue; Manchester, CT 06040. Mr. Logan subsequently generated a Soils Report dated January 29, 2021; entitled: "Wetlands Assessment, Mixed Use Development, 12 – 14 School Street, East Granby, Connecticut" and submitted a "Request for Natural Diversity Data Base State Listed Species Review" on February 8, 2017,
to the Connecticut Department of Environmental and Energy Protection. The State responded to this Preliminary Data Base Review request on February 23, 2017. All three documents are provided as support exhibits for the applicable Land Use Approval Applications.

3.) The Contractor shall check and verify all dimensions and other existing conditions. Any discrepancies shall be reported to the Owner or designated Engineer or Landscape Architect before proceeding with any work. Any work started before acceptance by the Owner, or designated representative shall be the sole responsibility of the Contractor and shall be subject to correction without additional compensation.

4.) A Pre-Construction Meeting with Owner and applicable Town Staff, to confirm activities for approved site development improvements and requisite Sedimentation and Erosion Control Measures, shall be required of the Contractor, prior to any site disturbance. Contact Planning Department to schedule requisite Pre-Construction Meeting prior to construction activity.

5.) Coordinate the site work with other Contractors and Utility Agencies performing work on site.

6.) All utilities to be installed underground, unless otherwise specifically noted. Any transformer pad location on site will be shown on the final plan with appropriate screening as deemed necessary by the appropriate Town Staff as well as the applicable Utility Agencies.

7.) Site Plan shall meet all requirements of the State Fire Code, if any.

8.) Proposed site lighting shall be supplied with "Full Cutoff" fixtures, with light source concentrated down and shielded from all abutting property and roadways, as required by Town of Granby Regulations and per the standards and design criteria of the applicable State Regulations, Utility Agencies and / or Product Manufacturer's specifications.

9.) Proposed site lighting shall be concentrated down and will be shielded from all abutting property and roadways, as required, and per the standards and design criteria of the applicable Town and State Regulations.

10.) All construction is to be done in accordance with Town of East Granby regulations, specifications and standards and applicable sections of the State of Connecticut D.O.T., Form 817-2016, "The Standard Specifications For Roads, Bridges And Incidental Construction", and as amended.

11.) All layout dimensions for the proposed Driveway, Parking and other related site improvement components on this Plan are taken from the inside face of the pavement where curbs are proposed and from pavement edge on uncurbed sections. All proposed vehicle pavement is to be bituminous pavement, unless otherwise noted. All proposed vehicle pavement curbing is to be bituminous curb, or integral concrete curb as part of monolithic concrete sidewalk, unless otherwise noted.

PERMIT - WETLANDS REGULATED ACTIVITY:
I hereby certify that at a meeting on_____ the East Granby Conservation Commission gave final approval to this Plan to conduct Regulated Wetland Activity in accordance with the East Granby Inland Wetlands and Watercourses Regulations.

Chairman Date Signed
In accordance Section 11.5.1 or the Regulations, all work in connection with this Permit shall expire unless activity has been initiated by _____ (One Year from the Date of Approval).
In accordance with Section 11.4.2 all work in connection with this Permit shall be completed by _____ (Five Years from date of Approval). In accordance with Section 11.4.2 the time period within which the Regulated Activity shall be conducted is limited to _____

Received for filing on _____ by _____ Town Clerk

SITE PLAN APPROVAL:
I hereby certify that at a meeting on_____the East Granby Planning & Zoning Commission approved this Site Plan in accordance with the East Granby Zoning Regulations.

Chairman: Date Signed:
In accordance with Section X.A.2.h of the Zoning Regulations, work in connection with this Site Plan shall begin by _____(18 months of the date of approval).
In accordance with CGS 8-3 (i), all work in connection with this Site Plan shall be completed by _____(five yea of the date of approval).
Received at the Planning & Zoning Office on by _____Title:_____

SPECIAL PERMIT APPROVAL:
I hereby certify that at a meeting on , the East Granby Planning & Zoning Commission approved a Special Permit in accordance with Section of the East Granby Zoning Regulations.
Chairman: Date Signed:
In accordance with Section X.A.1.f. of the Zoning Regulations, this Special Permit shall expire on _____(12 months of the date of approval) unless the authorized Special Permit activity has begun or unless an extension of time has been granted by the Commission.
In accordance with CGS 8-3d, any Special Permit shall be recorded in the Land Records.

Drawing Title:
Proposed Apartment Facility:
#12 & #14 School Street; East Granby, Connecticut 06026
LAYOUT PLAN

Prepared For:
12 SCHOOL STREET, LLC
399 LEDYARD STREET, UNIT #12-S;
HARTFORD, CT 06114

Scale: 1" = 20'
0' 10' 20' 30' 40' 60'
Date: 25 October 2023
Revisions:

Seal:
STATE OF CONNECTICUT ROBERT C. SCHECHINGER, JR. LICENSED LANDSCAPE ARCHITECT No. 530

Prepared By:
Robert C. Schechinger, Jr. ASLA
772 Farmington Avenue
Farmington, CT 06032
Telephone: (860) 478 - 7839
Email: BiffDesign@sbcglobal.net
Website: BiffLandDesign.com

Sheet No.
L.3

PROPOSED DETENTION BASIN CAPACITY NOTE:
FORE-BAY TOP EL.=182.00 = 9.00 C.Y. CAPACITY
FORE-BAY TOP EL.=184.00 = 44.15 C.Y. CAPACITY
WATER QUALITY BASIN TOP EL.=182.00 = 52.33 C.Y. CAPACITY
WATER QUALITY BASIN TOP EL.=184.00 = 213.55 C.Y. CAPACITY

PROPOSED SITE DISTURBANCE DATA:
TOTAL DISTURBANCE = 68,3358 SQ. FT., 1.57 ACRES
ON-SITE DISTURBANCE = 66,904 SQ. FT., 1.54 AC., 48.29% OF SITE
OFF-SITE DISTURBANCE = 1,454 SQ. FT., 0.03 ACRE

GRADING PLAN SPOT ELEVATION NOTE:
UNLESS OTHERWISE NOTED ALL SPOT ELEVATIONS ARE AT PAVEMENT EDGES; ADJACENT CURBING IS TYPICALLY 6" HT. UNLESS DESIGNATED AS FLUSH.

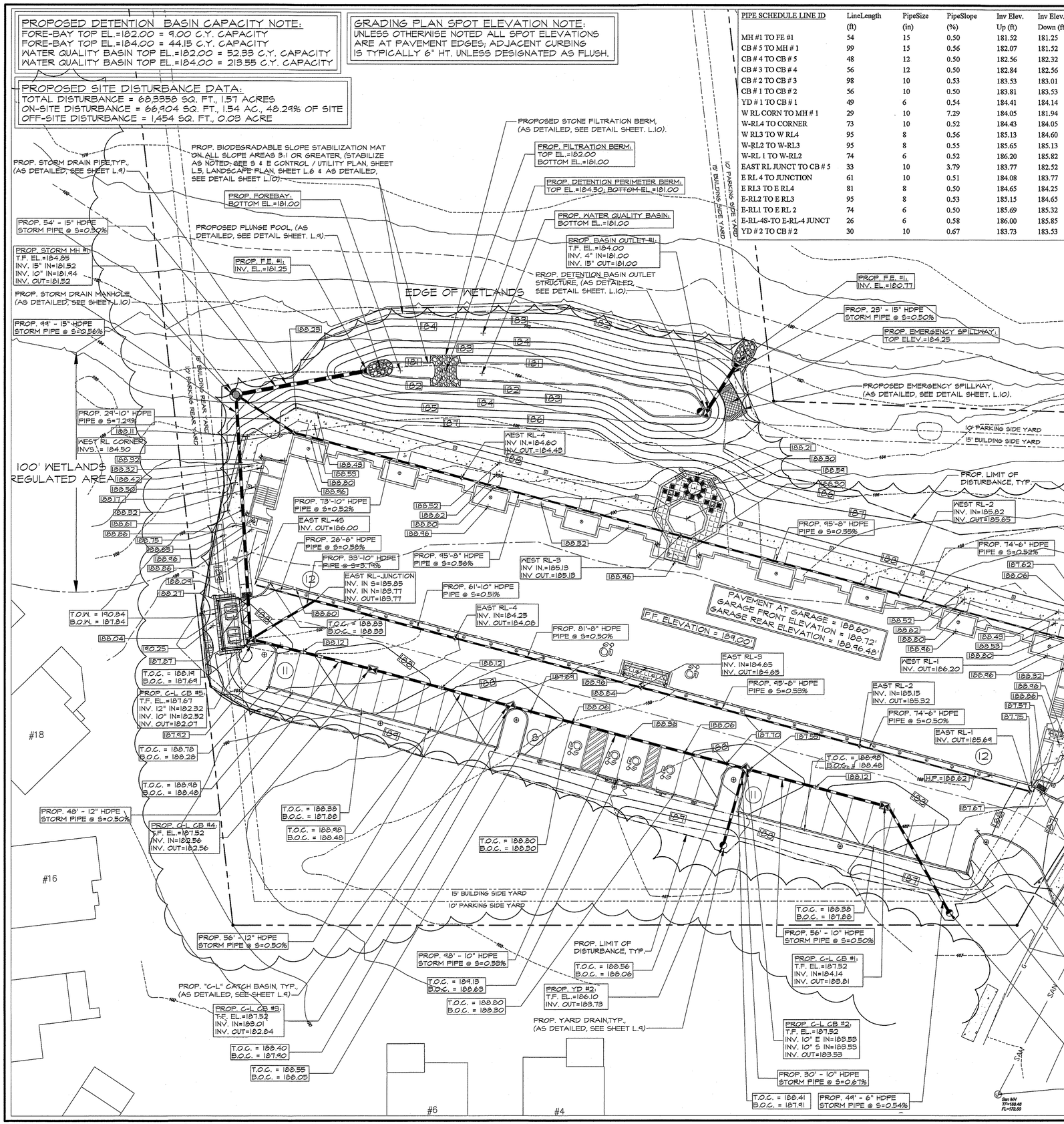

PIPE SCHEDULE LINE ID	LineLength (ft)	PipeSize (in)	PipeSlope (%)	Inv Elev. Up (ft)	Inv Elev. Down (ft)
MH #1 TO FE #1	54	15	0.50	181.52	181.25
CB # 5 TO MH # 1	99	15	0.56	182.07	181.52
CB # 4 TO CB # 5	48	12	0.50	182.56	182.32
CB # 3 TO CB # 4	56	12	0.50	182.84	182.56
CB # 2 TO CB # 3	98	10	0.53	183.53	183.01
CB # 1 TO CB # 2	56	10	0.50	183.81	183.53
YD # 1 TO CB # 1	49	6	0.54	184.41	184.14
W RL CORN TO MH # 1	29	10	7.29	184.05	181.94
W-RL4 TO CORNER	73	10	0.52	184.43	184.05
W RL3 TO W RL4	95	8	0.56	185.13	184.60
W-RL2 TO W-RL3	95	8	0.55	185.65	185.13
W-RL 1 TO W-RL2	74	6	0.52	186.20	185.82
EAST RL JUNCT TO CB # 5	33	10	3.79	183.77	182.52
E RL 4 TO JUNCTION	61	10	0.51	184.08	183.77
E RL3 TO E RL4	81	8	0.50	184.65	184.25
E-RL2 TO E RL3	95	8	0.53	185.15	184.65
E-RL1 TO E RL 2	74	6	0.50	185.69	185.32
E-RL-4S-TO E-RL-4 JUNCT	26	6	0.58	186.00	185.85
YD # 2 TO CB # 2	30	10	0.67	183.73	183.53

GENERAL GRADING NOTES:

1. The Contractor shall check and verify all contract documents and dimensions and all existing site conditions. Any discrepancies shall be reported to the Owner, Engineer, Landscape Architect and / or appropriate Town Staff, as required, before proceeding with any work. Any work started before notification to the Owner and /or appropriate Town Staff shall be the sole responsibility of the Contractor and shall be subject to corrections without additional compensation.
2. All items or work shall be laid out and grades established with stakes for approval by the Owner, Engineer, Landscape Architect and / or appropriate Town Staff prior to beginning work. Any discrepancies noted in the field from the drawings shall be brought to their attention prior to commencement of any work.
3. All finish grades shall be subject to final approval by the Owner, Engineer, Landscape Architect and / or appropriate Town Staff prior to finish grading.
4. Proposed grades shall be feathered and blended to meet existing terrain conditions following acceptable standard procedures according to the grade contours, as shown on the Drawings.
5. Fill material shall be clean excavated earth, sand, bank run gravel or other appropriate material. Under no circumstances shall rubbish, construction debris or boulders more than 6" in largest dimension, or other unsuitable material be contained within the fill material.
6. All construction debris remaining after construction work is completed shall be removed from the site and properly disposed of in a legal manner by the Contractor.
7. Any surplus materials shall be redistributed on-site as approved, unless otherwise directed by the appropriate Town Staff prior to its removal off site.
8. Prior to any excavation, Contractor shall verify all underground utilities by calling "Call Before You Dig ", 1-800-922-4455, (or 811), at least 72 hours in advance.
9. Prior to construction the limits of construction shall be flagged in the field by the Surveyor and certified as consistent with delineated development envelopes on approved Plans and as approved by the Owner and appropriate Town Staff, as required.
10. All areas of existing vegetation to be preserved shall be flagged and protected with the appropriate specified structures and methods prior to any construction activity. Failure by the Contractor to adequately protect this vegetation shall require suitable replacement of destroyed and or damaged plant material at no additional cost to the Owner. The Owner and / or appropriate Town Staff shall be the sole judge of the type, size and quantity of all replacement plant material.
11. All proposed Sedimentation and Erosion Control measures shall be implemented and structures installed prior to any earth disturbing construction activity, as detailed on the Drawings. The Contractor shall be responsible for the maintenance and preservation of functional viability of all measures for the duration of the project, or until specific sections of the project are successfully stabilized and approved by the Owner and / or appropriate Town Staff.
12. Additional Sedimentation and Erosion Controls measures may be required during construction, due to un-foreseen site and/or weather conditions. The Owner and/or appropriate Town Staff shall direct the Contractor in the installation of these additional measures, as needed.

PERMIT - WETLANDS REGULATED ACTIVITY:
I hereby certify that at a meeting on_____, the East Granby Conservation Commission gave final approval to this Plan to conduct Regulated Wetland Activity in accordance with the East Granby Inland Wetlands and Watercourses Regulations.
_____
Chairman Date Signed
In accordance Section 11.5.1 or the Regulations, all work in connection with this Permit shall expire unless activity has been initiated by _____ (One Year from the Date of Approval).
In accordance with Section 11.4.2 all work in connection with this Permit shall be completed by _____ (Five Years from date of Approval), in accordance with Section 11.4.2 the time period within which the Regulated Activity shall be conducted is limited to _____
Received for filing on _____ by _____, Town Clerk

SITE PLAN APPROVAL:
I hereby certify that at a meeting on_____ the East Granby Planning & Zoning Commission approved this Site Plan in accordance with the East Granby Zoning Regulations.
Chairman: _____ Date Signed:
In accordance with Section X.A.2.h of the Zoning Regulations, work in connection with this Site Plan shall begin by _____ (18 months of the date of approval).
In accordance with CGS 8-3 (i), all work in connection with this Site Plan shall be completed by _____ (five yes of the date of approval).
Received at the Planning & Zoning Office on by _____ Title: _____

SPECIAL PERMIT APPROVAL:
I hereby certify that at a meeting on , the East Granby Planning & Zoning Commission approved a Special Permit in accordance with Section of the East Granby Zoning Regulations.
Chairman_____ Date Signed_____
In accordance with Section X.A.1.f. of the Zoning Regulations, this Special Permit shall expire on _____ (12 months of the date of approval) unless the authorized Special Permit activity has begun or unless an extension of time has been granted by the Commission.
In accordance with CGS 8-3d, any Special Permit shall be recorded in the Land Records.

Seal:

STATE OF CONNECTICUT WILSON M. ALFORD, JR. No. 9344 LICENSED PROFESSIONAL ENGINEER

Prepared By:
Wilson M. Alford, Jr., L.S., P.E.
Alford Associates, Inc.
200 Pigeon Hill Road,
P.O. Box #484
Windsor, CT 06095
Telephone: (860) 688 - 7288
Facsimile: (860) 688 - 3485

ENGINEER NOTE: SEALED FOR STORM DRAINAGE, SANITARY SEWER AND RELATED DETAILS ONLY.

Drawing Title: Proposed Apartment Facility: #12 & #14 School Street; East Granby, Connecticut 06026
GRADING / DRAINAGE PLAN

Prepared For: 12 SCHOOL STREET, LLC
399 LEDYARD STREET, UNIT #12-S;
HARTFORD, CT 06114

Scale: 1" = 20' (0' 10' 20' 30' 40' 60')

Date: 25 October 2023

Revisions:

Seal:

STATE OF CONNECTICUT ROBERT C. SCHECHINGER, JR. NO. 530 LICENSED LANDSCAPE ARCHITECT

Prepared By:
Robert C. Schechinger, Jr. ASLA
772 Farmington Avenue
Farmington, CT 06032
Telephone: (860) 478 - 7839
Email: Biff.Design@sbcglobal.net
Website: BiffLandDesign.com

Sheet No.

L.4

GENERAL TURF ESTABLISHMENT AND MANAGEMENT NARRATIVE:

1. Soil Testing

A composite soil sample from the subject property will be collected and delivered to a University of Connecticut Cooperative Extension office for testing of soil nutrient levels (i.e., pH, nitrogen, phosphorus, calcium, magnesium, potassium) prior to a fertilizer application. The Extension office will recommend a fertilizer application rate based upon these test results. The actual fertilizer application rate will follow this recommendation. This will ensure against an excessive fertilizer application, which could lead to chemical leaching or export.

2. Slow-Release Fertilizers

Slow-release fertilizers will be applied to lawns, planted trees and shrubs. These can include, but are not limited to, organic-based fertilizers. A variety of commercial slow-release nitrogen fertilizer products are available (e.g., Milorganite, isobutylidene diurea, coated ureas, etc.). Advantages of slow-release fertilizers include the supply of a steady nitrogen source, and reduced nitrogen leaching. By combining small amounts of soluble nitrogen sources with slow-release nitrogen products, nitrogen availability can be extended without a threat of leaching.

3. Fertilizer Application Schedule

Fertilizer will be applied three times annually to the subject property: early to late May (after the threat of cool, wet weather has passed), late August to early September, and mid-September to mid-October. If the soil test indicates a need for lime, it will be applied at the last fertilization date.

4. Integrated Pest Management (IPM)

IPM is an integrated, preventative approach to maintaining healthy turf and landscape plants. IPM recognizes that, although chemicals are an important component of a turf management plan, other strategies are available to maintain a healthy lawn. A central premise of IPM is to treat pest problems as they arise on an as-needed basis only, using a variety of biological (e.g., natural predators), chemical and cultural (e.g., disease-resistant seed) practices.

OPERATIONS AND MAINTENANCE REQUIREMENTS:

MAINTENANCE OF THE STORM SYSTEM CONSISTS OF ROUTINE CLEANING OF THE ACCUMULATED SEDIMENTS AND DEBRIS BY THE LANDOWNER OR HIS DESIGNATED CONTRACTOR AS FOLLOWS:

1. CATCH BASINS - THE CATCH BASINS SHALL BE INSPECTED THREE TIMES ANNUALLY. ONE INSPECTION SHALL OCCUR IN APRIL. ANY DEBRIS WITHIN ONE FOOT OF THE BOTTOM OF EACH SUMP SHALL BE REMOVED BY VACUUM TYPE MAINTENANCE EQUIPMENT. THE HOOD SHALL BE INSPECTED TO INSURE THAT IT IS WORKING PROPERLY.

2. PLUNGE POOL - THE PLUNGE POOLS AND FORE BAY SHALL BE INSPECTED AT SIX-MONTH INTERVALS. REMOVE DEBRIS AND EXCESS SEDIMENT FROM THE POOL AFTER ONE FOOT OF SEDIMENT HAS ACCUMULATED. STONE SHALL BE RESET AS NECESSARY. SELECTIVE PRUNING OF SURROUNDING VEGETATION SHALL BE DONE AS NECESSARY TO MAINTAIN ACCESS TO POOL.

3. WATER QUALITY BASIN - THE BASIN SHALL BE INSPECTED AFTER LARGE STORM EVENTS (> 25 YR).

4. PARKING AREAS - PERFORM AN INSPECTION OF PARKING AREA SURFACES FOUR TIMES ANNUALLY WITH ONE INSPECTION EACH OCCURRING DURING MARCH AND APRIL. MECHANICAL SWEEPING EQUIPMENT AND MANUAL SWEEPING AS REQUIRED SHALL REMOVE SAND AND DEBRIS.

5. SODIUM CHLORIDE SHALL NOT BE USED AS A PAVEMENT DEICER DURING WINTER MONTHS.

PROP. EROSION & SEDIMENTATION CONTROLS LEGEND:

- 50' DEEP CONSTRUCTION ENTRY PAD.
- BIODEGRADABLE SLOPE STABILIZATION MAT.
- STAKED STRAW BALES OR SILT SOCK AROUND EXTERIOR & SILT SACK INSIDE CATCH BASINS
- STAKED STRAW BALES OR SILT SOCK.
- STAKED STRAW BALE CHECK DAM.
- TREE BARRIER FENCING
- SILT FENCE
- TOP SOIL STOCK PILE ENCLOSED IN SILT FENCE.

PERMIT - WETLANDS REGULATED ACTIVITY:
I hereby certify that at a meeting on _____, the East Granby Conservation Commission gave final approval to this Plan to conduct Regulated Wetland Activity in accordance with the East Granby Inland Wetlands and Watercourses Regulations.

Chairman _____ Date Signed _____

In accordance Section 11.5.1 of the Regulations, all work in connection with this Permit shall expire unless activity has been initiated by _____ (One Year from the Date of Approval).
In accordance with Section 11.4.2 all work in connection with this Permit shall be completed by _____ (five Years from date of Approval), in accordance with Section 11.4.2 the time period within which the Regulated Activity shall be conducted is limited to _____

Received for filing on _____ by _____ Town Clerk

SITE PLAN APPROVAL:
I hereby certify that at a meeting on _____ the East Granby Planning & Zoning Commission approved this Site Plan in accordance with the East Granby Zoning Regulations.

Chairman: _____ Date Signed: _____

In accordance with Section X.A.2.h of the Zoning Regulations, work in connection with this Site Plan shall begin by _____ (18 months of the date of approval).
In accordance with CGS 8-3 (i), all work in connection with this Site Plan shall be completed by _____ (five yea of the date of approval).
Received at the Planning & Zoning Office on by _____ Title: _____

SPECIAL PERMIT APPROVAL:
I hereby certify that at a meeting on , the East Granby Planning & Zoning Commission approved a Special Permit in accordance with Section of the East Granby Zoning Regulations.
Chairman _____ Date Signed: _____

In accordance with Section X.A.1.f. of the Zoning Regulations, this Special Permit shall expire on _____ (12 months of the date of approval) unless the authorized Special Permit activity has begun or unless an extension of time has been granted by the Commission.
In accordance with CGS 8-3d, any Special Permit shall be recorded in the Land Records.

EROSION AND SEDIMENTATION CONTROL NARRATIVE:

1. THE SITE IS A 3.1 ACRE PARCEL LOCATED ON THE SOUTH SIDE OF SCHOOL STREET IN EAST GRANBY, CONNECTICUT. THERE IS AN EXISTING SINGLE-FAMILY HOME, A GARAGE AND A SHED LOCATED ON THE PROPERTY. THE FRONT PORTION OF THE PROPERTY IS LAWN AND DRIVEWAYS. THE EASTERLY REAR PORTION OF THE PROPERTY IS OVERGROWN FIELDS AND BRUSH. THE WESTERLY REAR PORTION OF THE PROPERTY IS A WOODED WETLANDS ASSOCIATED WITH SHELDENS BROOK.

2. THE PROPOSAL IS TO CONSTRUCT A #40 UNIT APARTMENT BUILDING AND ASSOCIATED PARKING, UTILITIES AND SITE IMPROVEMENTS.

3. THE ANTICIPATED START OF CONSTRUCTION IS PLANNED FOR THE FALL OF 2023. THE LOCATIONS OF UNDERGROUND UTILITIES ARE APPROXIMATE AND ALL UTILITIES MAY NOT BE SHOWN. PRIOR TO CONSTRUCTION, CONTRACTOR SHALL "CALL BEFORE YOU DIG" AT 800-922-4455 AND HAVE UTILITIES MARKED ON THE GROUND.

4. THE SEQUENCE OF GRADING AND CONSTRUCTION ACTIVITIES ARE AS FOLLOWS:
   A. FLAG THE LIMITS OF CONSTRUCTION IN THE REAR OF THE PROPERTY.
   B. HOLD PRE-CONSRTRUCTION MEETING.
   C. INSTALL CONSTRUCTION ENTRANCE PAD AND FILTER FABRIC FENCE.
   D. REMOVE STRUCTURES, CUT TREES AND REMOVE BRUSH WITHIN THE AREA OF CONSTRUCTION AND REMOVE OFF SITE. CLEARING LIMITS SHALL BE STAKED/MARKED BY SURVEYOR AND INSPECTED BY WETLAND AGENT PRIOR TO CLEARING WOODED AREAS. ALL STUMPS TO BE GROUND ON-SITE OR REMOVED OFF-SITE.
   E. CONSTRUCT WATER QUALITY BASIN AND TEMPORARY OUTLET. THE BASIN IS TO BE USED AS A SILTATION BASIN DURING CONSTRUCTION. RUNOFF FROM THE SITE IS TO BE DIRECTED TO THE BASIN.
   F. STRIP AND STOCKPILE TOPSOIL WITHIN THE AREA OF CONSTRUCTION. THIS IS TO BE IN THE AREA OF BUILDING #2 DURING THE SITE WORK. PLACE FILTER FABRIC FENCE AROUND PILES AND COVER PILES WITH NETTING. SEE SHEET L.5 FOR LOCATIONS.
   G. MAKE ALL CUTS AND FILLS REQUIRED. ESTABLISH THE SUBGRADE FOR THE TOPSOIL AREAS, PARKING AND DRIVEWAY.
   H. CONSTRUCT STORM DRAINAGE. INSTALL SILT SACKS IN CATCH BASINS AND PERIMETER HAYBALES.
   I. CONSTRUCT SANITARY SEWER SYSTEM, WATER SERVICE AND OTHER SITE UTILITIES.
   J. BEGIN CONSTRUCTION OF BUILDING.
   K. PREPARE SUB-BASE, PARKING AREAS, DRIVEWAY, AND ANY OTHER AREA OF DISTURBANCE FOR FINAL GRADING.
   L. INSTALL PROCESSED AGGREGATE IN PARKING AREA AND DRIVEWAY.
   M. PLACE TOPSOIL WHERE REQUIRED. INSTALL PLANT MATERIAL. LOAM AND SEED FOR PERMANENT COVER. ALL 3:1 SLOPES AND STEEPER ARE TO BE STABILIZED WITH NETTING OR OTHER DIRECT STABILIZATION METHOD, IN ADDITION TO TEMPORARY OR PERMANENT SEEDING. IF PERMANENT COVER IS NOT DESIRABLE AT THE TIME OF SEEDING, USE TEMPORARY SEEDING COVER.
   N. TEMPORARY SEEDING SHALL BE USED WHEN SOILS WILL BE EXPOSED FOR A PERIOD OF GREATER THAN ONE (1) MONTH BUT LESS THAN TWELVE (12) MONTHS. SEEDING DATES: MARCH 1 TO JUNE 15 & AUGUST 1 TO OCTOBER 15. TEMPORARY SEED SHALL BE ANNUAL RYEGRASS, OR APPROVED EQUAL; APPLICATION RATE: 1 LB. / 1000 S.F. IF FINAL GRADING IS FINISHED TOO LATE IN THE SEASON FOR ESTABLISHMENT OF VEGETATIVE COVER, AREAS DISTURBED TO BE ROUGH GRADED, COVERED WITH HAY MULCH, THEN EROSION CONTROL FABRIC OR BLANKET TO BE PLACED ON TOP OF THE HAY. EROSION CONTROL FABRIC OR BLANKET TO BE PLACED PER MANUFACTURER'S SPECIFICATIONS.
   O. UPON SUBSTANTIAL COMPLETION OF THE BUILDINGS, COMPLETE THE BALANCE OF THE SITE WORK AND STABILIZATION OF ALL OTHER DISTURBED AREAS. INSTALL FIRST COURSE OF PAVEMENT.
   P. WHEN ALL OTHER WORK HAS BEEN COMPLETED, REPAIR AND SWEEP ALL PAVED AREAS FOR THE FINAL COURSE OF PAVING. INSPECT DRAINAGE SYSTEM AND CLEAN AS NEEDED.
   Q. INSTALL FINAL COURSE OF PAVEMENT.
   R. THE CONTRACTOR AND/OR OWNER SHALL BE RESPONSIBLE FOR INSTALLATION, MAINTENANCE, REPAIR, AND REPLACEMENT OF ALL EROSION CONTROL MEASURES UNTIL ALL CONTRIBUTING SURFACES HAVE BEEN STABILIZED. ACCUMULATED SEDIMENT SHALL BE REMOVED AS NECESSARY.
   S. AFTER SITE IS STABILIZED REMOVE TEMPORARY EROSION AND SEDIMENT CONTROLS.

5. GENERAL NOTES -
   A. GRADED AREAS ARE TO LOAMED AND SEEDED AS SOON AS POSSIBLE AFTER CONSTRUCTION WORK IS COMPLETED.
   B. A STOCKPILE OF CRUSHED STONE AND HAY BALES IS TO BE MAINTAINED ON SITE FOR USE DURING HEAVY RAINS OR OTHER EMERGENCIES.
   C. SEDIMENT REMOVED FROM CONTROL STRUCTURES WILL BE DISPOSED OF IN A LEGAL MANNER.
   D. THE CONTRACTOR SHALL BE RESPONSIBLE FOR THE CLEANING OF NEARBY STREETS OF ANY DEBRIS AND SEDIMENTS FROM THE CONSTRUCTION ACTIVITIES.
   E. THE CONTRACTOR SHALL DETERMINE THE EXTENT OF THE TEMPORARY FENCING REQUIRED TO PROTECT THE WORK AREA OF PUBLIC ACCESS IN ACCORDANCE WITH THE STATE OF CONNECTICUT BUILDING CODE.

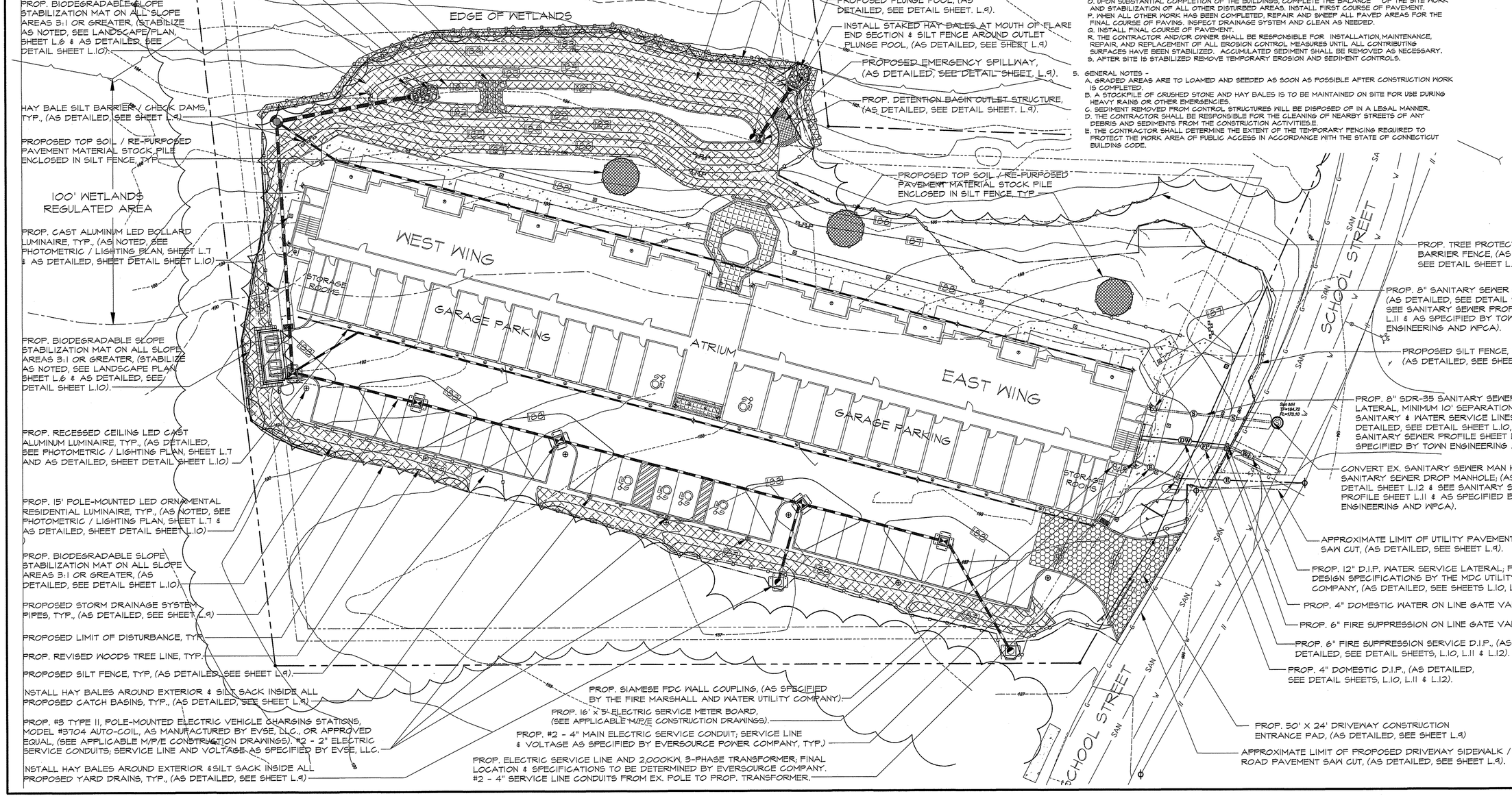

Seal:

STATE OF CONNECTICUT · WILSON H. ALFORD, JR. · No. 9344 · LICENSED PROFESSIONAL ENGINEER

Prepared By:
Wilson M. Alford, Jr., L.S., P.E.
Alford Associates, Inc.
200 Pigeon Hill Road,
P.O. Box #484
Windsor, CT 06095
Telephone: (860) 688 - 7288
Facsimile: (860) 688 - 3485

ENGINEER NOTE: SEALED FOR STORM DRAINAGE, SANITARY SEWER AND RELATED DETAILS ONLY.

Drawing Title:
Proposed Apartment Facility:
#12 & #14 School Street; East Granby, Connecticut 06026
S & E CONTROL / UTILITY PLAN

Prepared For:
12 SCHOOL STREET, LLC
399 LEDYARD STREET, UNIT #12-S;
HARTFORD, CT 06114

Scale: 1" = 30'
0' 15' 30' 45' 60' 90'

Date: 25 October 2023

Revisions:

Seal:

STATE OF CONNECTICUT · ROBERT C. SCHECHINGER, JR. · No. 530 · LICENSED LANDSCAPE ARCHITECT

Prepared By:
Robert C. Schechinger, Jr. ASLA
772 Farmington Avenue
Farmington, CT 06032
Telephone: (860) 478 - 7839
Email: BiffLDesign@sbcglobal.net
Website: BiffLandDesign.com

Sheet No.

L.5

Site Plant Schedule:

Key	Quantity	Botanical Name	Common Name	Size Installed	Comments
Street / Shade / Ornamental Trees:					
Ars	# 3	Acer rubrum 'Red Sunset'	Red Sunset Maple	3" – 3-1/2" Cal.	B & B
Gps	# 3	Ginko biloba 'Princeton Sentry'	Princeton Sentry Ginko Tree - Male	2" – 2-1/2" Cal.	B & B
Lsm	# 2	Liquidamber styraciflua 'Moraine'	Moraine Sweetgum	3" – 3-1/2" Cal.	B & B
Nsy	# 2	Nyssa sylvatica 'Wildfire'	Black Tupelo	3" – 3-1/2" Cal.	B & B
Qco	# 2	Quercus palustrus	Pin Oak	3" – 3-1/2" Cal.	B & B
Qpb	# 2	Quercus pal. 'Pacific Brilliance'	Pacific Brilliance Pin Oak	3" – 3-1/2" Cal.	B & B
Evergreen Trees:					
Cjy	# 7	Cryptomeria japonica'Yoshino'	Yoshino Japanese Cedar	6' – 7' Ht., 15' O.C.	B & B
Ish	# 2	Ilex opaca 'Satyr Hill'	Satry Hill American Holly	6' – 7' Ht., 12' O.C.	B & B
Tds	# 19	Thuja o. 'Degroot's Spire'	Degroot's Spire Arborvitae	5' – 6' Ht., 4.5' O.C.	B & B
Tpl	# 5	Thuja plicata 'Green Giant'	Green Giant Arborvitae	6' – 7' Ht., 12' O.C.	B & B
Shrubs:					
Chp	# 22	Cephalotaxus haringtonia 'Prostrata'	Prostate Japanese Plum Yew	3 Gal., 3' O.C.	Container
Igb	# 22	Ilex glabra 'Gem Box'	Gem Box Inkberry Holly	5 Gal., 3' O.C.	Container
Klc	# 4	Kalmia latifolia 'Carol'	Carol Mt. Laurel	6 Gal., 6' O.C.	Container
Kof	# 4	Kalmia latifolia 'Oylmpic Fire'	Olympic Fire Mt. Laurel	6 Gal., 5' O.C.	Container
Lax	# 16	Leucothoe axillaris	Coast Leucothoe	5 Gal., 4' O.C.	Container
Lfs	# 19	Leucothoe fontanesiana 'Scarletta'	Scarlet Leucothoe	5 Gal., 3' O.C.	Container
Mcp	# 28	Microbiota decussata 'Celtic Pride'	Celtic Pride Russian Cypress	3 Gal., 3' O.C.	Container
Pja	# 9	Pieris japonica 'Compacta'	Compact Japanese Pieris	6 Gal., 4.5' O.C	Container
Pca	# 28	Pieris japomnica 'Cavatine'	Cavatine Pieris	3 Gal., 3' O.C	Container
Pdw	# 4	Pieris japonica 'Dorothy Wycoff'	Dorothy Wycoff Pieris	6 Gal., 6' O.C	Container
Pfs	# 6	Pieris japonica 'Flaming Silver'	Flaming Sliver Pieris	6 Gal., 6' O.C	Container
Rma	# 2	Rhododendron maximum	Rosebay Rhododendron	3' – 4', 6' O.C.	Container
Rom	# 8	Rhododendron 'Olga Mezitt'	Olga Mezitt Rhododendron	6 Gal., 4' O.C.	Container
Rpj	# 13	Rhododendron 'PJM Elite'	Elite PJM Rhododendron	6 Gal., 4.5' O.C.	Container
Vco	# 10	Vaccinium corymbosum	Highbush Blueberry	6 Gal., 5' O.C.	Container
Vtr	# 12	Viburnum trilobum 'Compactum'	Compact American Cranberry	6 Gal., 5' O.C.	Container
Ornamental Grasses / Ground Cover / Perennials:					
Lbb	# 52	Liriope muscari 'Big Blue'	Big Blue Lily Turf	1 Gal., 18" O.C.	Container
Cla	# 39	Chasmanthium latifolium	Northern Sea Oats	2 Gal., 2' O.C.	Container
Hma	# 30	Hakonechloa macra	Japanese Forest Grass	2 Gal., 18" O.C.	Container
Prr	# 14	Panicum virgatum 'Ruby Ribbons'	Ruby Ribbons Switch Grass	3 Gal., 2.5' O.C.	Container
Herbaceous Wetland Plants:					
Aam	# 50	Acorus americana	Sweetflag	2" Plug, 2' O.C.	Flats
Ain	# 50	Asclepias incarnata	Swamp Milkweed	2" Plug, 2' O.C.	Flats
Cco	# 50	Carex comosa	Bearded Sedge	2" Plug, 2.5' O.C.	Flats
Chg	# 50	Chelone glabra	Turtlehead	2" Plug, 2' O.C.	Flats
Ech	# 50	Eupatorium maculatum	Joe Pye Weed	2" Plug, 2.5' O.C.	Flats
Lsp	# 50	Liatris spicata	Blazing Star	2" Plug, 2' O.C.	Flats
Scc	# 50	Scripus cyperinus	Woolgrass	2" Plug, 3' O.C.	Flats
Sla	# 50	Sagittaria latifolia	Northern Arrowhead	2" Plug, 2' O.C.	Flats

GENERAL SITE STABILIZATION NOTES AND SPECIFICATIONS:

1. The Contractor shall supply all grass seed mixes, erosion control blankets and other related stabilization materials in quantities sufficient to complete the work shown on the drawings and specified herein.
2. The Contractor shall submit Seed Producer's Product Sheets for all approved specified grass mixes for the Landscape Architect's review prior to on-site material delivery.
3. The Contractor shall provide product verification tags of the approved grass seed mixes Owner's construction supervisor or designated representative prior to installation.
4. All specified plant material shall be located on site by the Contractor for approval by the Owner, Landscape Architect and / or appropriate Town Staff, as directed. Any installation of material not by the Owner, Landscape Architect and / or appropriate Town Staff or the Owner's designated representative, and subsequently requested to be removed, will be done so at the Contractors expense.
5. Precise location of items not dimensioned on the plan to be scaled off the plan and field staked by the Contractor, for approval, as per Item Note # 4 above.
6. The Contractor is responsible for the prompt replacement of any damaged and / or unviable installed vegetation during the stipulated warranty period at his own expense. Unless otherwise specified, all plant material shall be under guarantee for a minimum of one year from formal acceptance by the Owner, Landscape Architect and / or appropriate Town Staff or the Owner's designated representative.
7. All rill, gulley and or channel erosion within the Project shall be filled with appropriate specified topsoil backfill material, fine raked, scarified and stabilized with appropriate vegetative material and/or appropriate sedimentation and erosion control measures, as directed by the Owner, Landscape Architect and / or appropriate Town Staff or the Owner's designated representative.
8. Adjustments in the location of proposed plant material as a result of existing vegetation to remain shall be approved by the Owner, Landscape Architect and / or appropriate Town Staff or the Owner's designated representative prior to installation.

GENERAL PLANTING NOTES:

1. All plant material to be nursery grown stock subject to applicable A.A.N. standards.
2. The Contractor shall supply all plants in quantities sufficient to complete the work shown on the drawings and listed in the plant list. In the event of a discrepancy between quantities shown in the plant lists and those required by the drawings, the larger number shall apply.
3. All plants shall be inspected by the Landscape Architect. Any plant material that is deemed unsatisfactory shall be immediately removed from the Site and replaced with acceptable specimens at the Contractor's expense.
4. Prior to installation, plant material shall be located on site by the Contractor for approval by the Landscape Architect. Any installations which were not approved by the Landscape Architect, and which are requested to be moved, will be done so at the Contractors expense. Precise location of items not dimensioned on the plan to be scaled off the plan and field staked by the Contractor, for approval, as per note # 3 above.
5. All shrub massing plantings and tree pits shall be mulched to a min. depth of 3" with shredded pine bark or hardwood mulch, as detailed.
6. All trees under 3" caliper shall be staked. All trees 3" caliper and greater shall be guyed, as detailed.
7. The Contractor is responsible for any damaged vegetation and shall replace or repair any damage at his own expense. Unless otherwise specified, all plant material shall be under guarantee for a minimum of one year for formal acceptance by the Owner.
8. The Contractor should contact "Call Before You Dig" at 1-800-922-4455, (811), and not commence with construction activity unless they have field verified the existence of subsurface utilities and demarcated their location within the development envelope.
9. Regardless of the results by adherence to activities described in Item 8. above, the Contractor is responsible for locating all utilities in the field. Where plant materials may interfere with utilities, the Contractor shall notify the Owner and Landscape Architect to coordinate their relocation prior to the installation of that material. Approval of plant material relocation must conform to the conditions dictated in Item 4. above.
10. All shrub and groundcover planting areas shall have minimum continuous beds of topsoil, 18" deep. Bare Root plantings shall have a minimum topsoil bed of 12", unless otherwise specified.
11. For planting soil mix, see specifications and/or planting details.
12. All existing rill, gulley and or channel erosion shall be filled with appropriate backfill material, fine raked, scarified and stabilized with appropriate vegetative material and / or appropriate sedimentation and erosion control measures, as required. Refer to appropriate Stabilization Seed Mix and / or Sedimentation and Erosion Control Plans, Details and Specifications for site-specific requirements.
13. Adjustments in the location of proposed plant material, as a result of existing vegetation determined in the field to remain, shall be approved by the Landscape Architect prior to installation, pursuant to the conditions dictated in Item 4. above.
14. Bare Root and Sprig planting areas shall be hydro-seeded first with specified Seed Mix for immediate stabilization. Once hydro-seed activity has been successfully completed, clear a 1' diameter area around each proposed Sprig and / or Bare Root planting bed, prior to installation of that specified plant material.
15. Additional Planting material and / or increased seeding rates may be required by the Owner, Landscape Architect as site conditions dictate. Additional materials shall be compensated, to the mutual agreement of the Owner and the Contractor, and shall be approved and located as directed by the Landscape Architect, and pursuant to the conditions specified in these General Notes.
16. Detention Basin Herbaceous Plants preferably planted between late Spring and August 15.

LANDSCAPE SUPPLEMENTAL GENERAL NOTES:
1.) ALL TREES PLANTED WITHIN THE PARKING LOT SHALL HAVE A MINIMUM CLEAR TRUNK HEIGHT OF 6' AND ALL SHRUBS SHALL BE KEPT TRIMMED SO AS NOT TO IMPEDE PEDESTRIAN OR MOTORIST SIGHT LINES.
2.) ALL SIGNIFICANT TREES OF 6" CALIPER OR GREATER ARE WITHIN THE DEVELOPMENT ENVELOPE AND SHALL BE REMOVED FOR REQUISITE GRADING ACTIVITY.
3.) TREES IN LANDSCAPE ISLANDS SECURED W/ MIN. #2 - 8' DIA. STAKES. STAKES SHALL NOT BE REMOVED UNTIL AT LEAST 1 YEAR AFTER INSTALLATION.
4.) ALL TREE AND SHRUB BEDS TO HAVE 3" - 4" OF UN-DYED WOOD BARK MULCH, AS SPECIFIED; MULCH SHALL NOT TOUCH PLANT BARK.

Site Slope Stabilization Seed Sall sedimentpecifications:

I.) General Seeding Notes:

1.) All disturbed areas not paved or otherwise landscaped shall be fine graded with 6" of approved loamy topsoil Apply soil amendments as directed pursuant to Soil Test Recommendations.
2.) Permanent Turf Seed application periods shall be between April 1 to June 15 and September 1 to October 15, unless otherwise directed, with the specified seed mixes and materials below.
3.) Permanent dormant seeding applications after the fall deadline into Winter shall be applied at a seeding rate of 110%, min., of the Manufacturer's standard recommended rate, or as directed otherwise.
4.) Temporary Turf Seed application periods shall be between March1 to June 15 and August to October 15, unless otherwise directed, with 100% Annual Rye Grass; Application Rate: 1 lb. / 1,000 Sq. Ft.
5.) Finish grading completed after viable growing season has past shall be stabilized with weed-free Hay Mulch, Erosion Control Fabric and / or Geotextile Blankets, or combination thereof, as directed. Unfinished disturbed areas remaining out of season shall be rough graded to the lines and specifications of the Drawings and then stabilized with the measures noted above, or alternative erosion control measures as necessitated by specific seasonal and site conditions, as directed.
6.) Seed Detention Basin after sediment from construction has been removed. Rake in seed after application if the soil is moist to saturated; do not seed with standing water in Basin.
7.) Refer to all additional, applicable requirements as set forth in the **"Planting General Notes"** on the appropriate Planting Plan(s), as well as all related, referenced Plans, Notes & Details.

II.) Seed Mixes & Specifications:

Grass Lawn Areas: Seeding Rate; 5 lb./1000 Sq. Ft., as manufactured by The Charles C. Hart Seed Co.; 304 Main Street; Wethersfield, CT 06109; Telephone: (860) 529 – 2537 or approved equal.

Kind of Seed	Percent of Weight
Magic Perennial Ryegrass	25%
Fiesta II	25%
Yorktown Perennial Ryegrass	15%
Touchdown Kentucky Bluegrass	20%
Merit Kentucky Bluegrass	15%

B. Shaded Turf Lawn Areas; Shall be Hart's "Evergreen Mixture (Sun & Shade)" Seed Mix, as manufactured by The Charles C. Hart Seed Co.; 304 Main Street; Wethersfield, CT 06109; Telephone: (860) 529 – 2537 or approved equal. Seeding Rate; 5 lb./1000 Sq. Ft.

Kind of Seed	Percent of Weight
Creeping Red Fescue	50%
Transit 2600 Intermediate Ryegrass	30%
Kentucky Bluegrass	10%
Chewing's Fescue	10%

Lawn Areas General Notes: Weed Seed; maximum of 0.50%, no noxious weed seed. Purity; minimum 97% pure. Crop; maximum 0.50%. Germination Rate; minimum 80%, (or as generally required by the manufacturer's recommendations and specifications). Apply per manufacturer's recommendations and specifications.

Detention Basin Areas:

Basin Bottom Between Elevations 181 & 183; Seeding Rate; 1 Lb./ 5,000 S.F.; shall be "New England Wetmix", as manufactured by New England Wetland Plants, Inc.; 820 Main Street, Amherst, MA 01002; Telephone: (413) 548 -8000 or approved equal. Apply per manufacturer's recommendations and specifications.

Basin Side Slopes Between Elevations 183 & 184.5; Seeding Rate; 35 Lbs. / Acre.; shall be "New England Erosion Control / Restoration Mix", as manufactured by New England Wetland Plants, Inc.; 820 Main Street, Amherst, MA 01002; Telephone: (413) 548 -8000 or approved equal. Apply per manufacturer's recommendations and specifications.

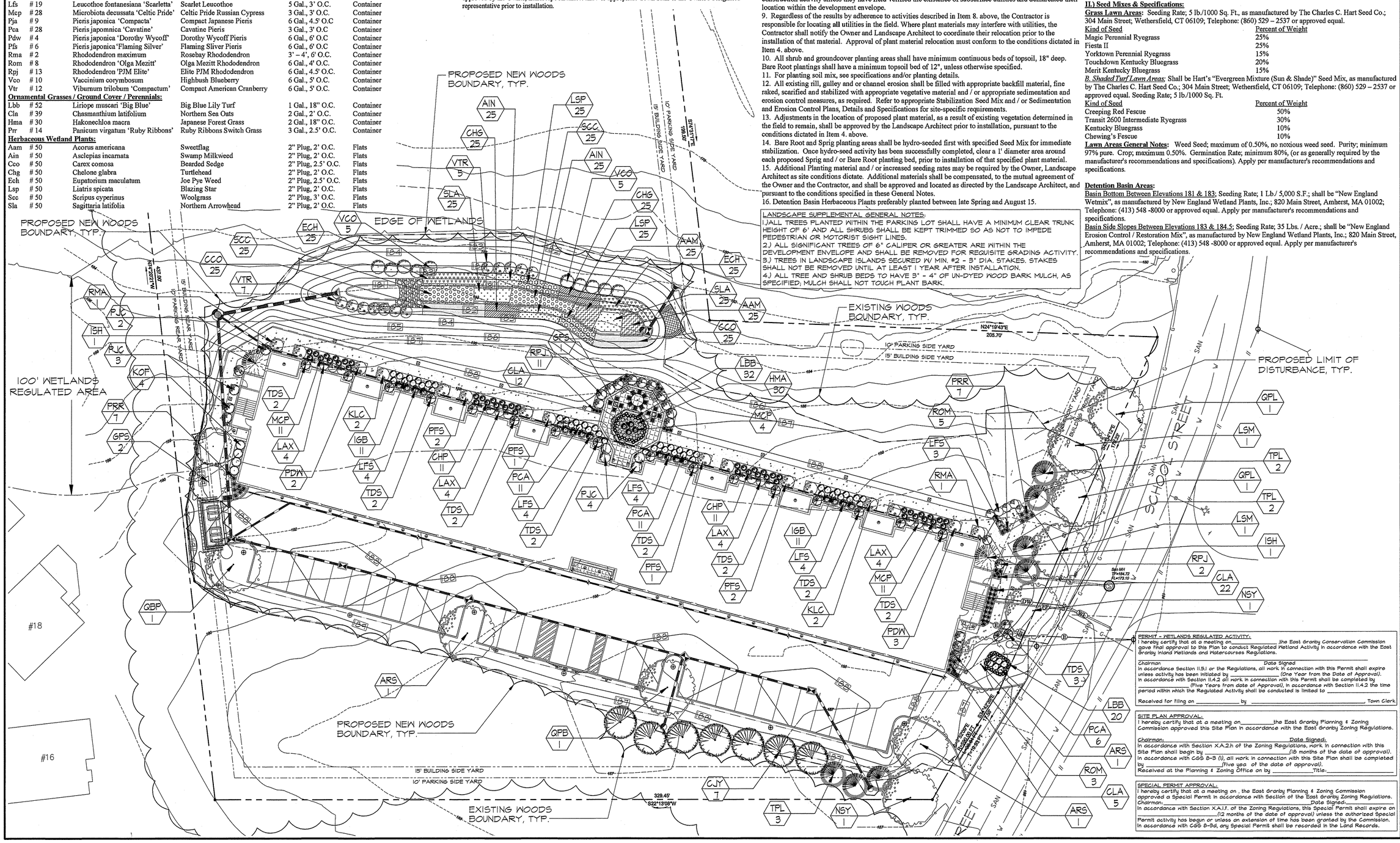

PERMIT - WETLANDS REGULATED ACTIVITY:
I hereby certify that at a meeting on _____ the East Granby Conservation Commission gave final approval to this Plan to conduct Regulated Wetland Activity in accordance with the East Granby Inland Wetlands and Watercourses Regulations.
_____
Chairman _____ Date Signed
In accordance Section 11.5.i or the Regulations, all work in connection with this Permit shall expire unless activity has been initiated by _____ (One Year from the Date of Approval).
In accordance with Section 11.4.2 all work in connection with this Permit shall be completed by _____ (Five Years from date of Approval), in accordance with Section 11.4.2 the time period within which the Regulated Activity shall be conducted is limited to _____
Received for filing on _____ by _____ Town Clerk

SITE PLAN APPROVAL:
I hereby certify that at a meeting on _____ the East Granby Planning & Zoning Commission approved this Site Plan in accordance with the East Granby Zoning Regulations.
Chairman: _____ Date Signed:
In accordance with Section X.A.2.h of the Zoning Regulations, work in connection with this Site Plan shall begin by _____ (18 months of the date of approval).
In accordance with CGS 8-3 (i), all work in connection with this Site Plan shall be completed by _____ (five yea of the date of approval).
Received at the Planning & Zoning Office on by _____ Title: _____

SPECIAL PERMIT APPROVAL:
I hereby certify that at a meeting on , the East Granby Planning & Zoning Commission approved a Special Permit in accordance with Section of the East Granby Zoning Regulations.
Chairman: _____ Date Signed:
In accordance with Section X.A.1.f. of the Zoning Regulations, this Special Permit shall expire on _____ (12 months of the date of approval) unless the authorized Special Permit activity has begun or unless an extension of time has been granted by the Commission.
In accordance with CGS 8-3d, any Special Permit shall be recorded in the Land Records.

Drawing Title: Proposed Apartment Facility:
#12 & #14 School Street; East Granby, Connecticut 06026
SITE RENDERING

Prepared For:
12 SCHOOL STREET, LLC
399 LEDYARD STREET, UNIT #12-S;
HARTFORD, CT 06114

Scale: 1" = 30'
0' 15' 30' 45' 60' 90'

Date: 25 October 2023

Revisions:

Seal:

STATE OF CONNECTICUT ROBERT C. SCHECHINGER, JR. LICENSED LANDSCAPE ARCHITECT No. 550

Prepared By:
Robert C. Schechinger, Jr. ASLA
772 Farmington Avenue
Farmington, CT 06032
Telephone: (860) 478 - 7839
Email: Biff.Design@sbcglobal.net
Website: BiffLandDesign.com

Sheet No.
L.6

POLE SCHEDULE NOTES:
1.) #7 - MODEL # 4694-14-BK-HH; 14' X 4" DIA. X .125" STRAIGHT ALUMINUM TUBE WALL ALLOY 6063-T6 ROUND POLE, W/ WELDED 10-1/8" DIA., 356 CAST ALUMINUM, FLUTED BASE PLATE. POLE AND BASE PLATE TO BE FINISHED W/ AAMA 2603 TEXTURED BLACK POWDER COAT.
2.) SET ON 18" X 8' CONCRETE BASE, AS DETAILED.
2.) PROPOSED POLES MEET 140MPH SUSTAINED WINDS.
3.) FIXTURE MOUNTING HEIGHT: 15', (14' POLE + 12" PANEL HT.

CONCRETE POLE FOOTING NOTE:
RAISED CONCRETE LIGHT POLE BASE 6" ABOVE GRADE, AS DETAILED.

PHOTOMETRIC PLAN PREPARED BY:
GLENN POTTERTOM
LANGLAIS GROUP INC.
11 SEA PAVE ROAD
SOUTH WINDSOR, CT. 06074
E: GLENN@LANGLAISGROUP.COM
C: 860.805.5701
O: 860.648.2480

PHOTOMETRIC LIGHTING PLAN NOTES:
1. ALL FIXTURES SHALL HAVE FULL CUT OFF LIGHTING AND PROVIDED WITH REAR AND SIDE SHIELDING, AS NECESSARY TO AVOID LIGHT TRESPASS OFF SITE.
2. VERIFY ANY AND ALL DIMMING COMPATIBILITIES WITH ELECTRICAL CONTRACTOR PRIOR TO ORDERING.
3. VERIFY FINAL VOLTAGE WITH ELECTRICAL CONTRACTOR PRIOR TO ORDERING.
4. PHOTOMETRY IS BASED OFF MANUFACTURER'S I.E.S. FILES. ACTUAL LIGHT LEVELS MAY VARY SLIGHTLY. FOOT-CANDLES CALCULATED AT GRADE.
5. ANY POLE LOCATIONS AND SPECIFIED HEIGHTS TO BE VERIFIED IN THE FIELDS.
6. ALL MOUNTING DETAILS AND HARDWARE TO BE DETERMINED BY OTHERS.
7. MAXIMUM POLE-MOUNTED FIXTURE HEIGHT - 15'.
8. MAXIMUM WALL-MOUNTED FIXTURE HEIGHT - 9.0'.
9. ALL FIXTURES, POLES, COVERS AND HARDWARE TO BE FINISHED POWER-COATED BLACK.
10. LIGHTING SYSTEM FIXTURES TO BE ON TIMERS; FACILITY LIGHTING SYSTEM OPERATIONAL HOURS ARE GENERALLY 6:00 PM TO 6:00 AM., (ADJUSTED FOR SEASONAL VARIATIONS).

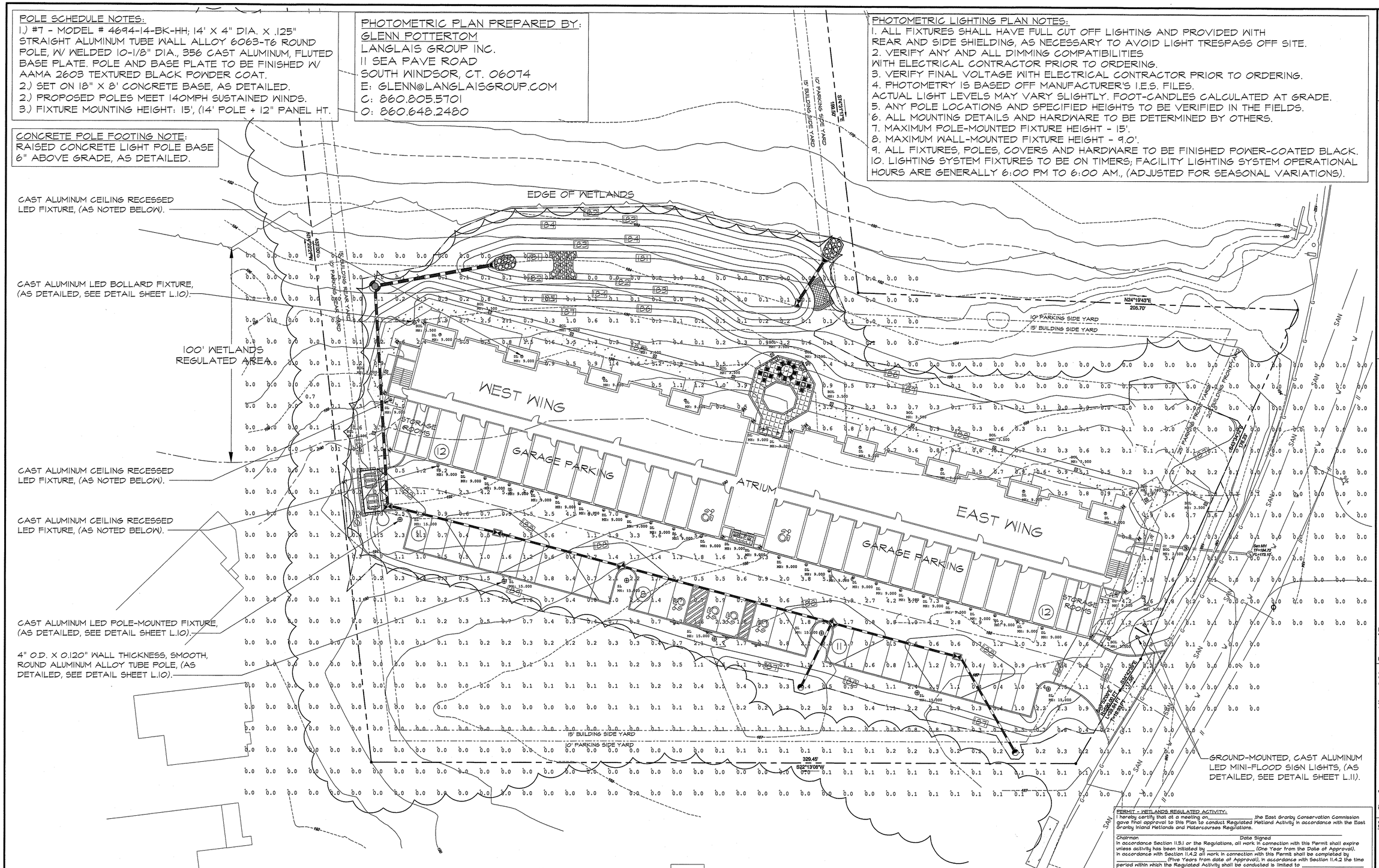

Luminaire Schedule							
Symbol	Qty	Label	Description	LLF	Lum. Lumens	Lum. Watts	Total Watts
	7	SL	C31T-L-L40-W-BK	1.000	3,340	65.9636	461.745
	38	DL	LED-RDL-5/6-PC-CCT-WH-SM	1.000	1,122	18.50	703.000
	18	BOL	LED-BDL-RD-5CCT-LV-FL-BL-BLD-3P22-RD-UNV-BL-44	1.000	1,341	21.8551	393.392
	2	SPOT	1621-BKT-40-SL; MOUNTING STAKE: SKU-15276-BK	1.000	1,210	100.00	12.00

Calculation Summary								
LABLE	CALC-TYPE	UNITS	AVG.	MAX.	MIN.	AVG. MIN.	MAX / MIN
CALCPTS-1	ILLUMINANCE	FC	0.32	8.8	0.0	N / A	N / A
PARKING LOT AREA	ILLUMINANCE	FC	1.87	7.5	0.4	4.68	18.75

PERMIT - WETLANDS REGULATED ACTIVITY:
I hereby certify that at a meeting on _____ the East Granby Conservation Commission gave final approval to this Plan to conduct Regulated Wetland Activity in accordance with the East Granby Inland Wetlands and Watercourses Regulations.
_____
Chairman Date Signed
In accordance Section 11.5.1 or the Regulations, all work in connection with this Permit shall expire unless activity has been initiated by _____ (One Year from the Date of Approval).
In accordance with Section 11.4.2 all work in connection with this Permit shall be completed by _____ (Five Years from date of Approval), in accordance with Section 11.4.2 the time period within which the Regulated Activity shall be conducted is limited to _____
Received for filing on _____ by _____ Town Clerk

SITE PLAN APPROVAL:
I hereby certify that at a meeting on _____ the East Granby Planning & Zoning Commission approved this Site Plan in accordance with the East Granby Zoning Regulations.
Chairman: _____ Date Signed:
In accordance with Section X.A.2.h of the Zoning Regulations, work in connection with this Site Plan shall begin by _____ (18 months of the date of approval).
In accordance with CGS 8-3 (i), all work in connection with this Site Plan shall be completed by _____ (five yea of the date of approval).
Received at the Planning & Zoning Office on by _____ Title: _____

SPECIAL PERMIT APPROVAL:
I hereby certify that at a meeting on , the East Granby Planning & Zoning Commission approved a Special Permit in accordance with Section of the East Granby Zoning Regulations.
Chairman: _____ Date Signed: _____
In accordance with Section X.A.1.f. of the Zoning Regulations, this Special Permit shall expire on _____ (12 months of the date of approval) unless the authorized Special Permit activity has begun or unless an extension of time has been granted by the Commission.
In accordance with CGS 8-3d, any Special Permit shall be recorded in the Land Records.

Drawing Title:
Proposed Apartment Facility:
#12 & #14 School Street, East Granby, Connecticut 06026
PHOTOMETRIC PLAN

Prepared For:
12 SCHOOL STREET, LLC
399 LEDYARD STREET, UNIT #12-S;
HARTFORD, CT 06114

Scale: 1" = 20'
0' 10' 20' 30' 40' 60'

Date: 25 October 2023

Revisions: _____

Seal:
STATE OF CONNECTICUT ROBERT C. SCHECHINGER NO. 550 LANDSCAPE ARCHITECT

Prepared By:
Robert C. Schechinger, Jr. ASLA
772 Farmington Avenue
Farmington, CT 06032
Telephone: (860) 478 - 7839
Email: Biff.Design@sbcglobal.net
Website: BiffLandDesign.com

Sheet No.
L.7

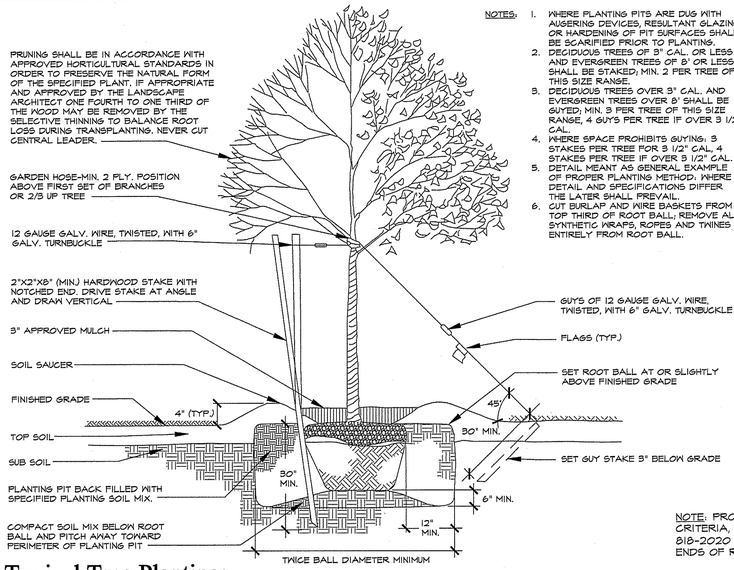

NOTES:
1. WHERE PLANTING PITS ARE DUG WITH AUGERING DEVICES, RESULTANT GLAZING OR HARDENING OF PIT SURFACES SHALL BE SCARIFIED PRIOR TO PLANTING.
2. DECIDUOUS TREES OF 3" CAL. OR LESS AND EVERGREEN TREES OF 8' OR LESS SHALL BE STAKED; MIN. 2 PER TREE OF THIS SIZE RANGE.
3. DECIDUOUS TREES OVER 3" CAL. AND EVERGREEN TREES OVER 8' SHALL BE GUYED; MIN. 3 PER TREE OF THIS SIZE RANGE, 4 GUYS PER TREE IF OVER 3 1/2" CAL.
4. WHERE SPACE PROHIBITS GUYING, 3 STAKES PER TREE FOR 3 1/2" CAL. 4 STAKES PER TREE IF OVER 3 1/2" CAL.
5. DETAIL MEANT AS GENERAL EXAMPLE OF PROPER PLANTING METHOD; WHERE DETAIL AND SPECIFICATIONS DIFFER THE LATER SHALL PREVAIL.
6. CUT BURLAP AND WIRE BASKETS FROM TOP THIRD OF ROOT BALL; REMOVE ALL SYNTHETIC WRAPS, ROPES AND TWINES ENTIRELY FROM ROOT BALL.

Typical Tree Planting:
Scale: N.T.S.

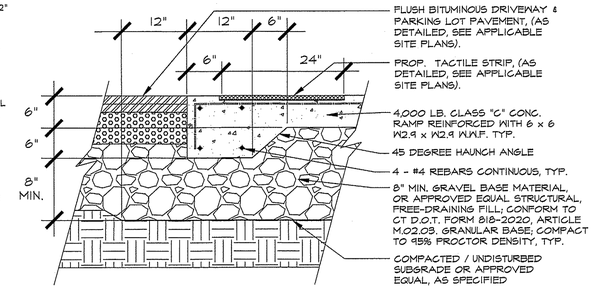

Haunched Flush Conc. Sidewalk W/ Warning Strip:
Scale: N.T.S (Non-Vehicle Loading)

GENERAL NOTES: 1.) CONTRACTOR TO PROVIDE SHOP DRAWINGS FOR ALL FINAL JOINT LAYOUTS IN PAVEMENT. DOWELED EXPANSION JOINTS TO BE SET 30' MAX. INSTALL WHERE SIDEWALK ABUTS EX. SIDEWALK SECTIONS & AT THE TOP & BOTTOM OF CURB RAMPS, AS DETAILED. DOWELS TO BE PLACE 3' O.C.MAX., WITH MIN. # 2 DOWELS PER EXPANSION JOINT. LATERAL SCORE JOINTS TO BE 1/4" X 1/4", AT 6' MAX. O.C., TYP. 2.) TO INSURE PROP. GRADES PITCH TO DRAIN ON ALL WALK SURFACES. CROSS PITCH SIDEWALK MAX. 1:48 TOWARD EX. DRAINAGE INLETS OR ADJACENT LAWN AREAS. MEDIUM BROOM FINISH SURFACE TREATMENT, OR APPROVED EQUAL.

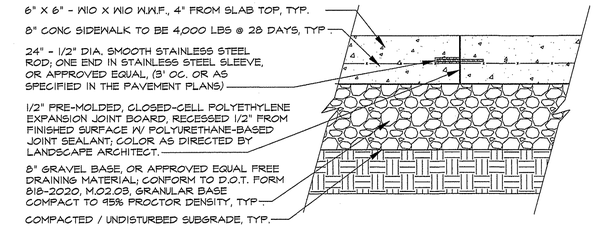

5' Driveway Sidewalk W/ Doweled Expansion Joint:
Scale: N.T.S.

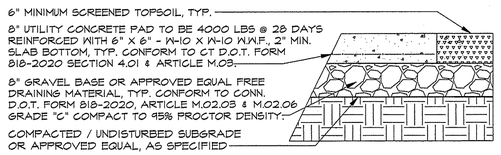

Concrete Utility / Dumpster Pad :
Scale: N.T.S.

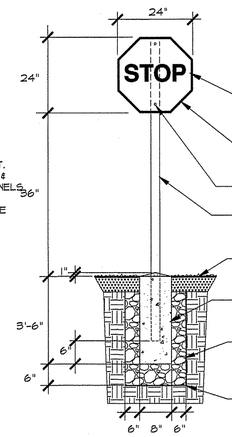

NOTE: ALL SPECIFIED TRAFFIC CONTROL SIGNS SHALL CONFORM TO "THE MANUAL OF UNIFORM TRAFFIC CONTROL DEVICES", STANDARD ALPHABETS FOR HIGHWAY SIGNS & PAVEMENT MARKINGS" AND CT-DOT, FORM 817, AND AS AMENDED.

Typical Traffic Control Sign & Post:
N.T.S.

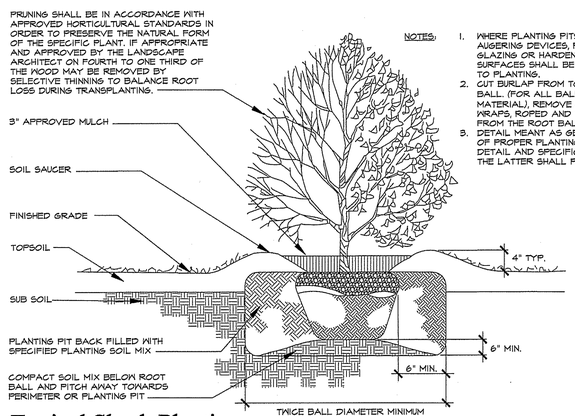

NOTES:
1. WHERE PLANTING PITS ARE DUG WITH AUGERING DEVICES, RESULTANT GLAZING OR HARDENING OF PIT SURFACES SHALL BE SCARIFIED PRIOR TO PLANTING.
2. CUT BURLAP FROM TOP THIRD OF ROOT BALL. (FOR ALL BALLED AND BURLAP MATERIAL), REMOVE ALL SYNTHETIC WRAPS, ROPED AND TWINED ENTIRELY FROM THE ROOT BALL OR PLANT.
3. DETAIL MEANT AS GENERAL EXAMPLE OF PROPER PLANTING METHOD, WHERE DETAIL AND SPECIFICATIONS DIFFER, THE LATTER SHALL PREVAIL.

Typical Shrub Planting:
Scale: N.T.S.

NOTE: PROPOSED HANDICAP ACCESSIBLE RAMP TO CONFORM TO STANDARD ADA DESIGN CRITERIA, CONNECTICUT STATE PUBLIC ACT NO. 16-78 AND CONNECTICUT D.O.T. FORM 818-2020 CRITERIA, AND AS AMENDED, (OR APPROVED EQUAL, AS SPECIFIED). HAUNCH ENDS OF RAMP, AS DETAILED, TYP.

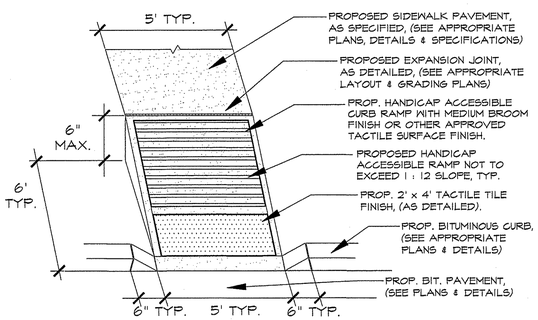

Handicap Accessible Curb-Cut Ramp W/ Tactile Strip :
Scale: N.T.S

GENERAL NOTES: 1.) CONTRACTOR TO PROVIDE SHOP DRAWINGS FOR ALL FINAL JOINT LAYOUTS IN PAVEMENT. DOWELED EXPANSION JOINTS TO BE SET 30' MAX. INSTALL WHERE SIDEWALK ABUTS EX. SIDEWALK SECTIONS & AT THE TOP & BOTTOM OF CURB RAMPS, AS DETAILED. DOWELS TO BE PLACE 3' O.C.MAX., WITH MIN. # 2 DOWELS PER EXPANSION JOINT. LATERAL SCORE JOINTS TO BE 1/4" X 1/4", AT 6' MAX. O.C., TYP. 2.) TO INSURE PROP. GRADES PITCH TO DRAIN ON ALL WALK SURFACES. CROSS PITCH SIDEWALK MAX. 1:48 TOWARD EX. DRAINAGE INLETS OR ADJACENT LAWN AREAS. MEDIUM BROOM FINISH SURFACE TREATMENT, OR APPROVED EQUAL.

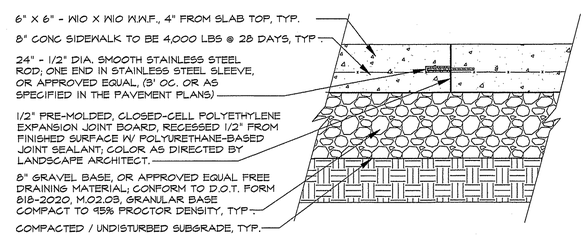

5' Pedestrian Sidewalk W/ Doweled Expansion Joint:
Scale: N.T.S.

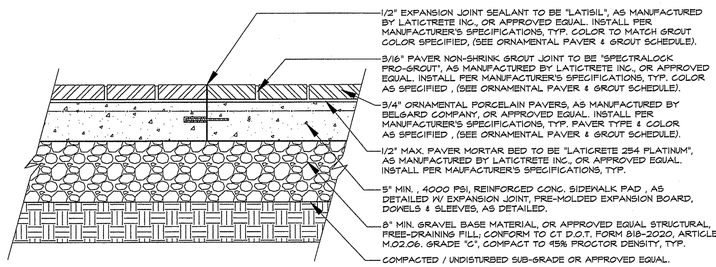

Ornamental Pavers On Concrete Pad:
N.T.S.

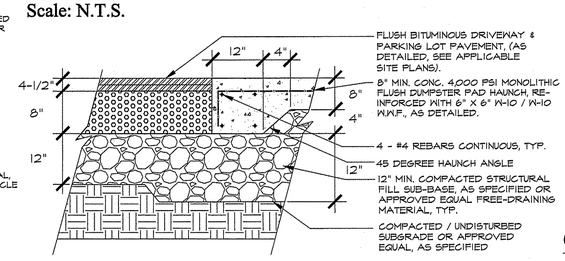

Dumpster Pad Flush Haunch @ Pavement:
N.T.S.

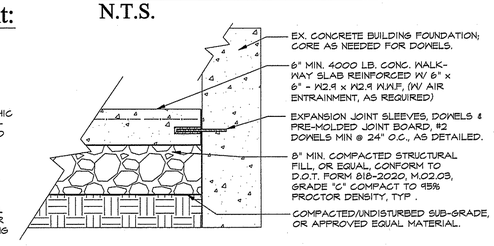

Concrete Sidewalk W/ Doweled Expansion Joint At Door Landings:
Scale: N.T.S.

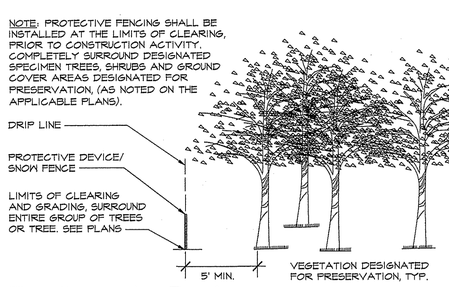

NOTE: PROTECTIVE FENCING SHALL BE INSTALLED AT THE LIMITS OF CLEARING, PRIOR TO CONSTRUCTION ACTIVITY. COMPLETELY SURROUND DESIGNATED SPECIMEN TREES, SHRUBS AND GROUND COVER AREAS DESIGNATED FOR PRESERVATION, (AS NOTED ON THE APPLICABLE PLANS).

Tree Protection Barrier:
Scale: N.T.S.

NOTE: MATERIALS TO CONFORM TO THE CONN. D.O.T. FORM 818-2020 CRITERIA, AND AS AMENDED, (OR APPROVED EQUAL, AS SPECIFIED). BITUMINOUS PAVEMENT SECTION 4.06. & ARTICLE M.04.01 - M.04.03, PROCESS AGGREGATE SECTION 3.04. & ARTICLE M.02.03 - GRADING "C", COMPACTED GRAVEL SUB-BASE SECTION 2.12; ARTICLE M.02.02 - GRADE "A". AN INDEPENDENT THIRD PARTY / CERTIFIED LABORATORY SHALL CONFIRM SUB-GRADE IS OF ADEQUATE BEARING CAPACITY PRIOR TO PAVING. CONDITIONS MAY REQUIRE INSTALLATION OF MIRAFI 500 GEOTEXTILE FABRIC, OR APPROVED EQUAL.

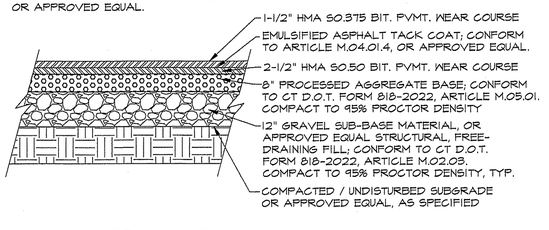

Bituminous Vehicle Pavement:
Scale: N.T.S.

NOTES: 1.) CURBING MATERIAL TO BE HMA-S0.25 BITUMINOUS CONCRETE, PER CONN. D.O.T. FORM 818-2020, AS AMENDED, SECTION 8.15. & ARTICLE M.04.02.1. 2.) CURBING TO BE LAID ON TOP OF BITUMINOUS BASE COURSE. 3.) TACK COAT TO BE PER 646-22, APPLIED PRIOR TO CURB PLACEMENT AS REQUIRED. COATING TO BE APPLIED PER CONN. D.O.T. FORM 818-2020, AS AMENDED, ARTICLE M. 04.02.3, AS SPECIFIED.

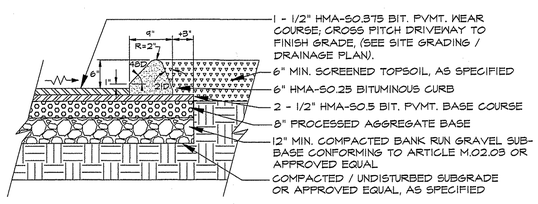

Bituminous Vehicle Pavement Curb:
N.T.S.

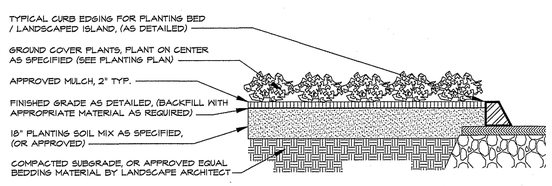

Typical Groundcover / Perennial Bed Planting:
Scale: N.T.S.

Drawing Title:
Proposed Apartment Facility:
#12 & #14 School Street; East Granby, Connecticut 06026
DETAILS & GENERAL NOTES

Prepared For:
12 SCHOOL STREET, LLC
399 LEDYARD STREET, UNIT #12-S;
HARTFORD, CT 06114

Scale: As Noted
Date: 25 October 2023
Revisions:

PERMIT - WETLANDS REGULATED ACTIVITY:
I hereby certify that at a meeting on _____ the East Granby Conservation Commission gave final approval to this Plan to conduct Regulated Wetland Activity in accordance with the East Granby Inland Wetlands and Watercourses Regulations.
Chairman _____ Date Signed _____
In accordance Section 11.5.1 or the Regulations, all work in connection with this Permit shall expire unless activity has been initiated by _____ (One Year from the Date of Approval).
In accordance with Section 11.4.2 all work in connection with this Permit shall be completed by _____ (Five Years from date of Approval), in accordance with Section 11.4.2 the time period within which the Regulated Activity shall be conducted is limited to _____
Received for filing on _____ by _____ Town Clerk

SITE PLAN APPROVAL:
I hereby certify that at a meeting on _____ the East Granby Planning & Zoning Commission approved this Site Plan in accordance with the East Granby Zoning Regulations.
Chairman: _____ Date Signed: _____
In accordance with Section X.A.2h of the Zoning Regulations, work in connection with this Site Plan shall begin by _____ (18 months of the date of approval).
In accordance with CGS 8-3 (i), all work in connection with this Site Plan shall be completed by _____ (five yea of the date of approval).
Received at the Planning & Zoning Office on by _____ Title: _____

SPECIAL PERMIT APPROVAL:
I hereby certify that at a meeting on , the East Granby Planning & Zoning Commission approved a Special Permit in accordance with Section of the East Granby Zoning Regulations.
Chairman _____ Date Signed: _____
In accordance with Section X.A.1.f. of the Zoning Regulations, this Special Permit shall expire on _____ (12 months of the date of approval) unless the authorized Special Permit activity has begun or unless an extension of time has been granted by the Commission.
In accordance with CGS 8-3d, any Special Permit shall be recorded in the Land Records.

Seal:
STATE OF CONNECTICUT ROBERT C. SCHECHINGER JR. LICENSED LANDSCAPE ARCHITECT NO. 539

Prepared By:
Robert C. Schechinger, Jr. ASLA
772 Farmington Avenue
Farmington, CT 06032
Telephone: (860) 478 - 7839
Email: BiffDesign@sbcglobal.net
Website: BiffandDesign.com

Sheet No.
L.8

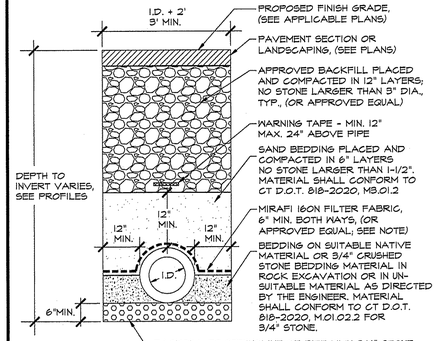

Storm Sewer Pipe Trench Detail:
Scale: N.T.S

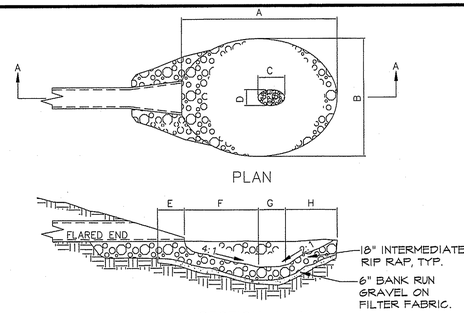

PIPE	A	B	C	D	E	F	G	H	WT. TONS
12"	10'	7'	1-1/2'	1'	1'	4-1/2'	1-1/2'	3'	6
15"	10'	7'	1-1/2'	1'	1'	4-1/2'	1-1/2'	3'	6
18"	12'	8'	2'	1'	1'	5'	2'	4'	8

Basin Pipe Discharge Plunge Pool:
Scale: N.T.S

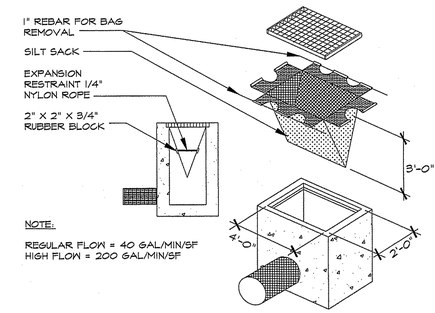

Silt Sack Yard Drain Inlet Protection:
Scale: N.T.S

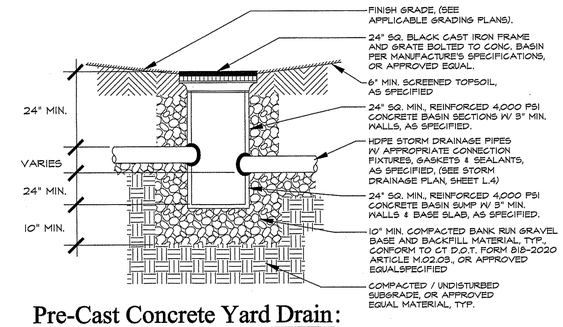

Pre-Cast Concrete Yard Drain:
Scale: N.T.S

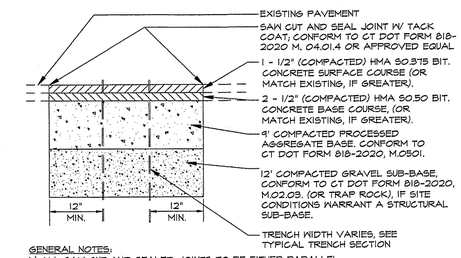

GENERAL NOTES:
1.) ALL SAW CUT AND SEALED JOINTS TO BE EITHER PARALLEL WITH, OR PERPENDICULAR TO, THE CENTERLINE OF THE PIPE.
2.) ALL MATERIALS ARE TO MEET CT D.O.T. FORM 818-2020, AND AS AMENDED.

Saw Cut &Patch Bituminous Pavement :
Scale: N.T.S

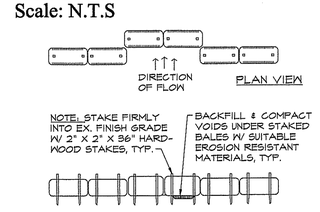

Hay Bales Around Catch Basin:
Scale: N.T.S

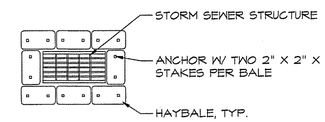

Hay Bale Silt Check Dam:
Scale: N.T.S

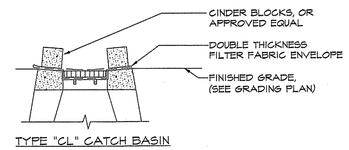

Yard Drain Protection Detail:
Scale: N.T.S

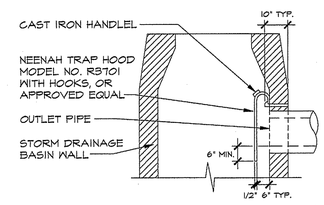

Drain Basin Trap Hood Detail:
Scale: N.T.S

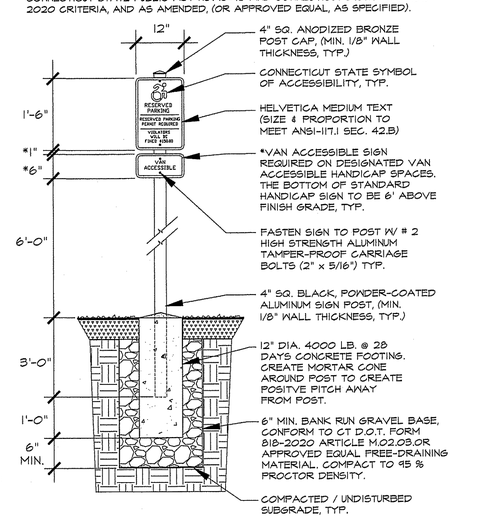

SIGN NOTE: HANDICAP SYSMBOLSIGN TEXT AND MATERIALS TO CONFORM TO CONNECTICUT STATE PUBLIC ACT NO. 16-78 AND CONNECTICUT D.O.T. FORM 818-2020 CRITERIA, AND AS AMENDED, (OR APPROVED EQUAL, AS SPECIFIED).

Handicap Parking Sign & Bollard:
N.T.S.

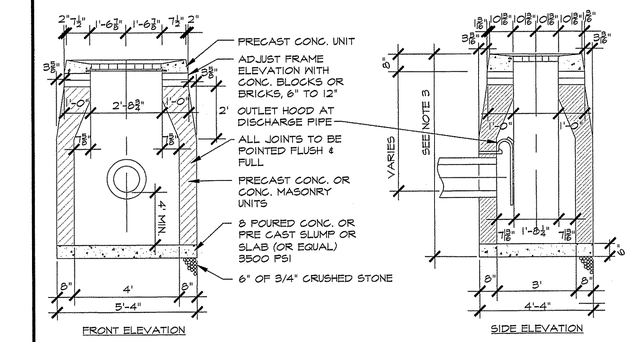

GENERAL NOTES:
1. MINIMUM COVER OVER TOP OF PIPE SHALL BE 2'-0".
2. WALL THICKNESS SHALL BE SUFFICIENT TO MEET HS-20 LOADING.
3. WALL THICKNESS FOR STRUCTURES OVER 10' HIGH IS 12" FOR CONCRETE BLOCK UNITS. INSIDE DIMENSIONS REMAIN THE SAME.
4. ALL PIPES SHALL BE CUT FLUSH WITH INSIDE WALLS.
5. ALL BRICKS SHALL BE CONCRETE.
6. ALL OUTLET PIPES SHALL HAVE PROTECTIVE METAL HOODS, AS DETAILED.
6. ALL PIPE PENETRATIONS SHALL BE PARGED SMOOTH TO PROVIDE A WATERTIGHT SEAL BOTH INSIDE AND OUTSIDE THE BASIN.
7. INSIDE WALLS OF STRUCTURE TO BE SMOOTH. NO SHELVES ALLOWED.
8. IF 4' SUMP IS NOT POSSIBLE DUE TO UTILITY CONFLICTS OR SITE CONSTRAINTS, A 2' SUMP MAY BE SUBMITTED FOR THE TOWN ENGINEERS APPROVAL.
9. FRAME AND GRATE SHALL BE GALVANIZED.

Type "C-L" Catch Basin:
Scale: N.T.S

PE THREADED ROD WITH WING NUTS AND SPACERS. 30" & 36" END SECTIONS REQUIRE #2 THREADED RODS.

DIMENSIONS					
DIA.	A	B (MAX)	H	L	W
12"	6.5"	10"	6.5"	25"	24"
15"	6.5"	10"	6.5"	25"	29"
18"	7.5"	15"	6.5"	32"	35"

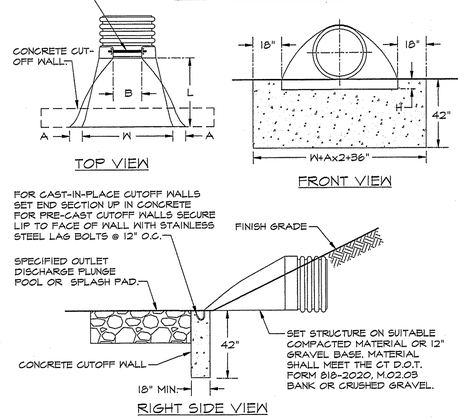

Corrugated HDPE Flared End Section:
Scale: N.T.S

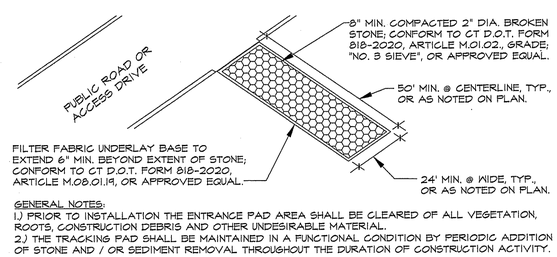

GENERAL NOTES:
1.) PRIOR TO INSTALLATION THE ENTRANCE PAD AREA SHALL BE CLEARED OF ALL VEGETATION, ROOTS, CONSTRUCTION DEBRIS AND OTHER UNDESIRABLE MATERIAL.
2.) THE TRACKING PAD SHALL BE MAINTAINED IN A FUNCTIONAL CONDITION BY PERIODIC ADDITION OF STONE AND / OR SEDIMENT REMOVAL THROUGHOUT THE DURATION OF CONSTRUCTION ACTIVITY.

Construction Tracking Pad:
Scale: N.T.S

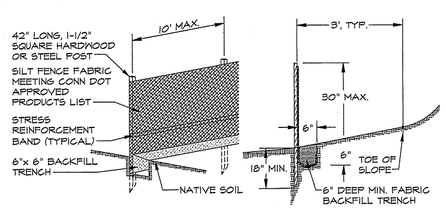

Silt Fence Barrier Detail:
Scale: N.T.S

BOLLARD LOCATION NOTE: PLACE BOLLARDS IMMEDIATELY IN FRONT OF DUMPSTER GATE POSTS TO PROTECT FROM REFUSE TRUCK ENCROACHMENT.

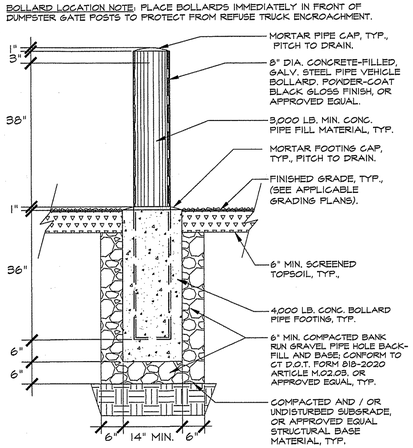

Steel Vehicle Protection Bollard:
N.T.S.

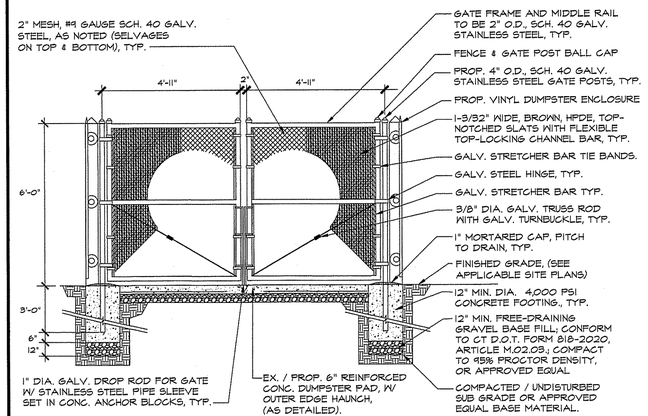

Double-Hung Metal Dumpster Gate W/ Fence Boards:
Scale: N.T.S

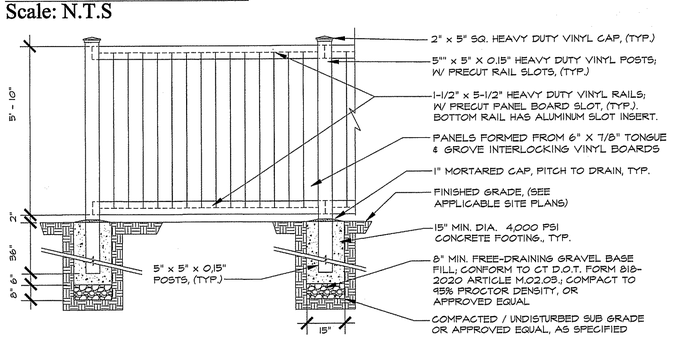

6' High Dumpster Enclosure / Perimeter Privacy Fence:
Scale: N.T.S

PERMIT - WETLANDS REGULATED ACTIVITY:
I hereby certify that at a meeting on_____ the East Granby Conservation Commission gave final approval to this Plan to conduct Regulated Wetland Activity in accordance with the East Granby Inland Wetlands and Watercourses Regulations.
_____
Chairman Date Signed
In accordance Section 11.5.1 or the Regulations, all work in connection with this Permit shall expire unless activity has been initiated by _____ (One Year from the Date of Approval).
In accordance with Section 11.4.2 all work in connection with this Permit shall be completed by _____ (Five Years from date of Approval). In accordance with Section 11.4.2 the time period within which the Regulated Activity shall be conducted is limited to _____
Received for filing on _____ by _____ Town Clerk

SITE PLAN APPROVAL:
I hereby certify that at a meeting on_____ the East Granby Planning & Zoning Commission approved this Site Plan in accordance with the East Granby Zoning Regulations.
Chairman: Date Signed:
In accordance with Section X.A.2.h of the Zoning Regulations, work in connection with this Site Plan shall begin by _____ (18 months of the date of approval).
In accordance with CGS 8-3 (i), all work in connection with this Site Plan shall be completed by _____ (five yea of the date of approval).
Received at the Planning & Zoning Office on by _____ Title: _____

SPECIAL PERMIT APPROVAL:
I hereby certify that at a meeting on , the East Granby Planning & Zoning Commission approved a Special Permit in accordance with Section of the East Granby Zoning Regulations.
Chairman: Date Signed: _____
In accordance with Section X.A.1.f. of the Zoning Regulations, this Special Permit shall expire on _____ (12 months of the date of approval) unless the authorized Special Permit activity has begun or unless an extension of time has been granted by the Commission. In accordance with CGS 8-3d, any Special Permit shall be recorded in the Land Records.

Seal:

STATE OF CONNECTICUT WILSON M. ALFORD, JR. No. 9344 LICENSED PROFESSIONAL ENGINEER

Prepared By:
Wilson M. Alford, Jr., L.S., P.E.
Alford Associates, Inc.
200 Pigeon Hill Road,
P.O. Box #484
Windsor, CT 06095
Telephone: (860) 688 - 7288
Facsimile: (860) 688 - 3485

ENGINEER NOTE: SEALED FOR STORM DRAINAGE, SANITARY SEWER AND RELATED DETAILS ONLY.

Drawing Title:
Proposed Apartment Facility:
#12 & #14 School Street; East Granby, Connecticut 06026
DETAILS & GENERAL NOTES

Prepared For:
12 SCHOOL STREET, LLC
399 LEDYARD STREET, UNIT #12-S;
HARTFORD, CT 06114

Scale: As Noted (0' 0' 0' 0' 0' 0')
Date: 25 October 2023
Revisions:

Seal:

STATE OF CONNECTICUT ROBERT C. SCHECHINGER NO. 530 LICENSED LANDSCAPE ARCHITECT

Prepared By:
Robert C. Schechinger, Jr. ASLA
772 Farmington Avenue
Farmington, CT 06032
Telephone: (860) 478 - 7839
Email: BiffLDesign@sbcglobal.net
Website: BiffLandDesign.com

Sheet No.
L.9

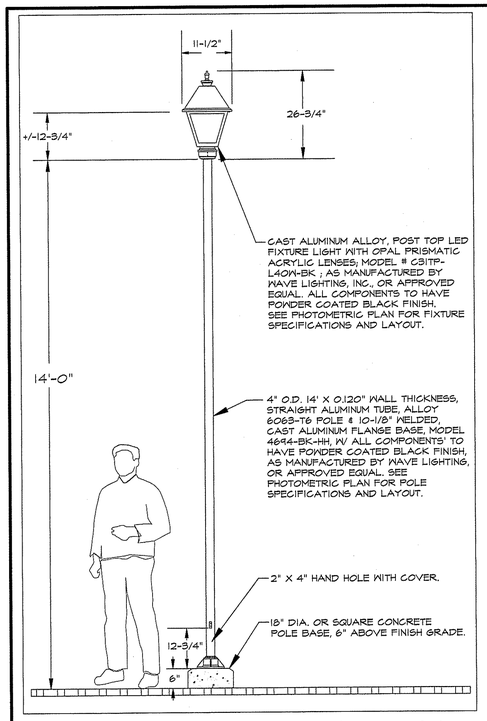

Pole-Mounted LED Ornamental Area Light:
Scale: N.T.S

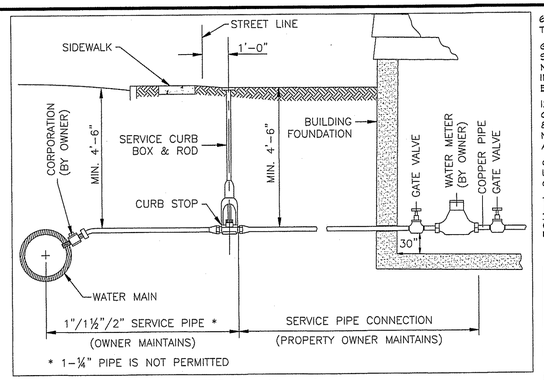

MDC "K" Copper Water Service:
Scale: N.T.S

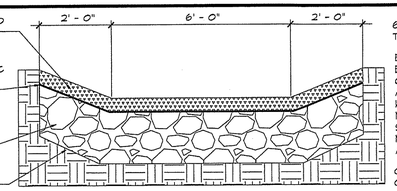

Detention Basin Emergency Spillway Detail:
Scale: N.T.S

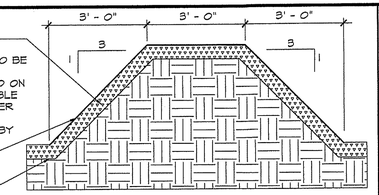

Detention Basin Berm Detail:
Scale: N.T.S

Seal:

STATE OF CONNECTICUT · WILSON M. ALFORD, JR. · No. 9344 · LICENSED PROFESSIONAL ENGINEER

Prepared By:
Wilson M. Alford, Jr., L.S., P.E.
Alford Associates, Inc.
200 Pigeon Hill Road,
P.O. Box #484
Windsor, CT 06095
Telephone: (860) 688 - 7288
Facsimile: (860) 688 - 3485

ENGINEER NOTE: SEALED FOR STORM DRAINAGE, SANITARY SEWER AND RELATED DETAILS ONLY.

Drawing Title: Proposed Apartment Facility:
#12 & #14 School Street; East Granby, Connecticut 06026

DETAILS & GENERAL NOTES

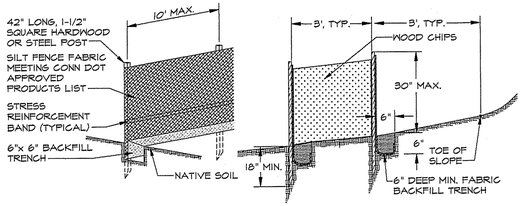

Double Silt Fence Barrier W/ Wood Chip Fill:
Scale: N.T.S

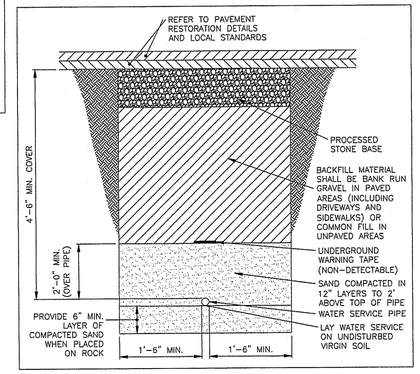

MDC Water Lateral Pipe Trench:
Scale: N.T.S

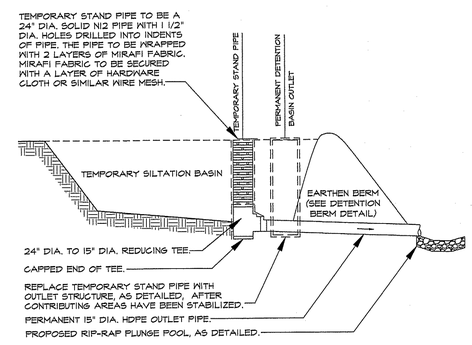

Temporary Siltation Basin Outlet :
Scale: N.T.S

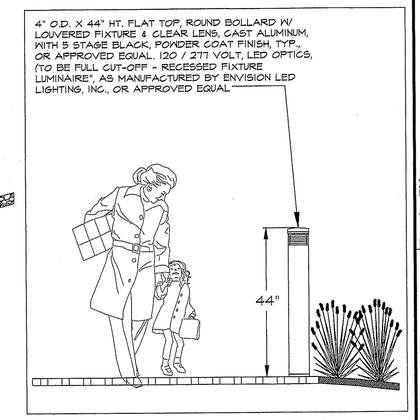

Pedestrian LED Pathway Light:
Scale: N.T.S

SITE LIGHT POLE BASE GENERAL NOTES:
1.) CONTRACTOR TO SUPPLY FUSE AT BASE OF POLE AT HAND HOLE.
2.) CONDUIT AND CONDUCTORS SEE SITE PLAN - PROVIDE RACEWAYS UNDER PAVED AREAS, DIRECT BURIAL CONDUCTORS AT NON-PAVED AREAS.
3.) CONCRETE BASES SHALL BE REVIEWED AND APPROVED BY STRUCTURAL ENGINEER FOR FINAL SIZE, DEPTH AND REINFORCEMENT.
4.) CONCRETE BASES SHALL BE SET LEVEL AND PLUMB.
5.) POLES SHALL BE INSTALLED STRAIGHT AND SHALL REMAIN SO AT TIME OF COMPLETION. ALL NECESSARY ADJUSTMENTS SHALL BE DONE TO ENSURE STRAIGHT ALIGNMENT OF ALL POLES PRIOR TO ACCEPTANCE OF WORK.
6.) POLE MOUNTING PLATE, BOLT PATTERN AND ANCHORING HARDWARE SUPPLIED BY MANUFACTURER.
7.) POLE SHALL BE 4" ROUND, 11 GAUGE, STRAIGHT .125 WALL ALUMINUM ALLOY, AND CUT TO FACILITATE A MAXIMUM FIXTURE MOUNTING HEIGHT OF 16'.

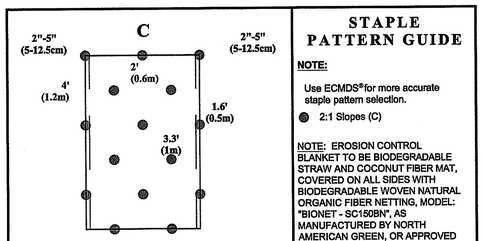

STAPLE PATTERN GUIDE

NOTE:

Use ECMDS® for more accurate staple pattern selection.

● 2:1 Slopes (C)

NOTE: EROSION CONTROL BLANKET TO BE BIODEGRADABLE STRAW AND COCONUT FIBER MAT, COVERED ON ALL SIDES WITH BIODEGRADABLE WOVEN NATURAL ORGANIC FIBER NETTING, MODEL: "BIONET - SC150BN", AS MANUFACTURED BY NORTH AMERICAN GREEN, OR APPROVED EQUAL.

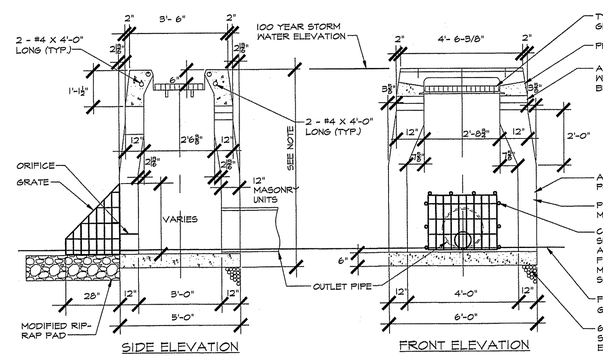

Permanent Detention Basin Outlet Structure:
Scale: N.T.S

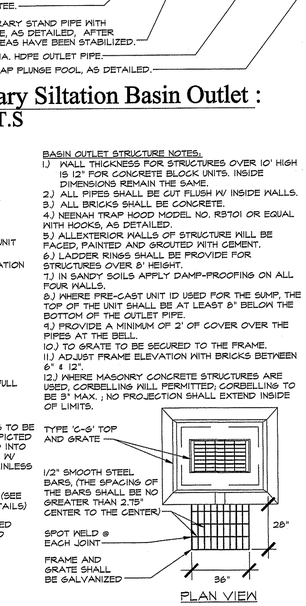

BASIN OUTLET STRUCTURE NOTES:
1.) WALL THICKNESS FOR STRUCTURES OVER 10' HIGH IS 12" FOR CONCRETE BLOCK UNITS. INSIDE DIMENSIONS REMAIN THE SAME.
2.) ALL PIPES SHALL BE CUT FLUSH W/ INSIDE WALLS.
3.) ALL BRICKS SHALL BE CONCRETE.
4.) NEENAH TRAP HOOD MODEL NO. R3701 OR EQUAL WITH HOOKS, AS DETAILED.
5.) ALLEXTERIOR WALLS OF STRUCTURE WILL BE FACED, PAINTED AND GROUTED WITH CEMENT.
6.) LADDER RINGS SHALL BE PROVIDE FOR STRUCTURES OVER 8' HEIGHT.
7.) IN SANDY SOILS APPLY DAMP-PROOFING ON ALL FOUR WALLS.
8.) WHERE PRE-CAST UNIT ID USED FOR THE SUMP, THE TOP OF THE UNIT SHALL BE AT LEAST 8" BELOW THE BOTTOM OF THE OUTLET PIPE.
9.) PROVIDE A MINIMUM OF 2' OF COVER OVER THE PIPES AT THE BELL.
10.) TO GRATE TO BE SECURED TO THE FRAME.
11.) ADJUST FRAME ELEVATION WITH BRICKS BETWEEN 6" & 12".
12.) WHERE MASONRY CONCRETE STRUCTURES ARE USED, CORBELLING WILL PERMITTED. CORBELLING TO BE 3" MAX , NO PROJECTION SHALL EXTEND INSIDE OF LIMITS.

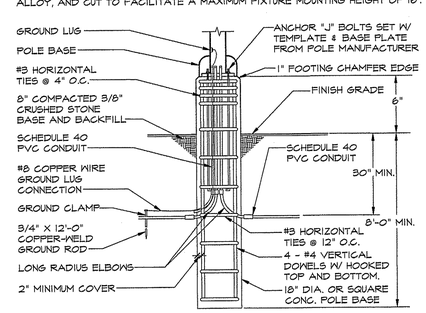

Concrete Light Pole Base:
Scale: N.T.S.

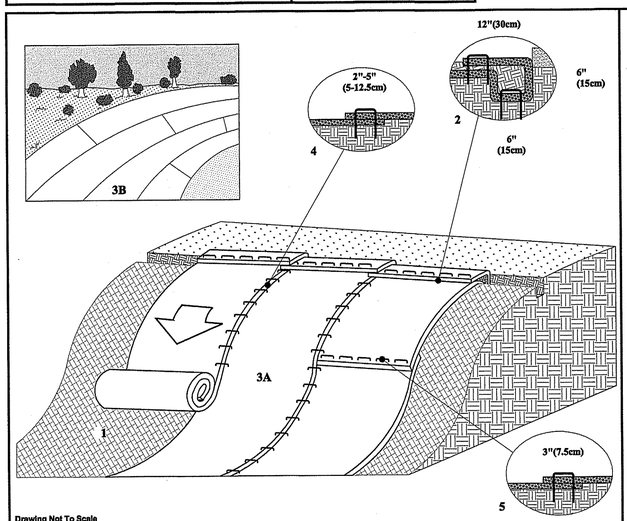

Drawing Not To Scale

Tensar. | NORTH AMERICAN GREEN®
5401 St. Wendel - Cynthiana Rd. PH: 800-772-2040
Poseyville, IN 47633 www.tensarnagreen.com

Disclaimer:
The information presented herein is general design information only. For specific applications, consult an independent professional for further design guidance.

SLOPE INSTALLATION DETAIL

1. Prepare soil before installing rolled erosion control products (RECPs), including any necessary application of lime, fertilizer, and seed.
2. Begin at the top of the slope by anchoring the RECPs in a 6"(15cm) deep X 6"(15cm) wide trench with approximately 12" (30cm) of RECPs extended beyond the up-slope portion of the trench. Anchor the RECPs with a row of staples/stakes approximately 12" (30cm) apart in the bottom of the trench. Backfill and compact the trench after stapling. Apply seed to the compacted soil and fold the remaining 12"(30cm) portion of RECPs back over the seed and compacted soil. Secure RECPs over compacted soil with a row of staples/stakes spaced approximately 12"(30cm) apart across the width of the RECPs.
3. Roll the RECPs (A) down or (B) horizontally across the slope. RECPs will unroll with appropriate side against the soil surface. All RECPs must be securely fastened to soil surface by placing staples/stakes in appropriate locations as shown in the staple pattern guide.
4. The edges of parallel RECPs must be stapled with approximately 2" - 5" (5-12.5cm) overlap depending on the RECPs type.
5. Consecutive RECPs spliced down the slope must be end over end (Shingle style) with an approximate 3"(7.5cm) overlap. Staple through overlapped area, approximately 12"(30cm) apart across entire RECPs width.

*NOTE:
In loose soil conditions, the use of staple or stake lengths greater than 6"(15cm) may be necessary to properly secure the RECP's.

Biodegradable Slope Stabilization Mat:
Scale: N.T.S

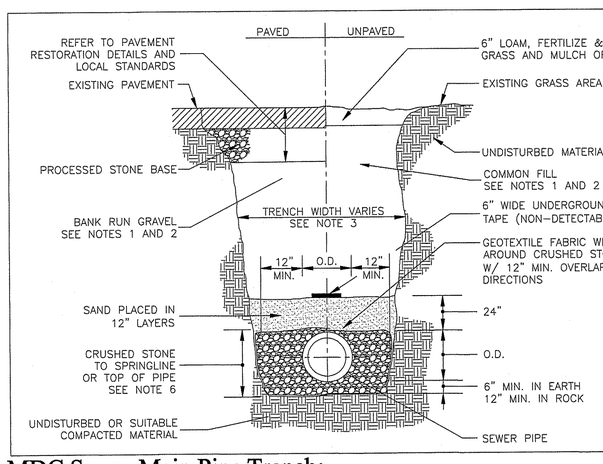

NOTES:
1. ALL EXCAVATED MATERIAL SHALL BE REMOVED FROM THE SITE AND DISPOSED.
2. BACKFILL MATERIAL SHALL BE APPROVED BANK RUN GRAVEL IN PAVED AREAS (INCLUDING DRIVEWAYS AND SIDEWALKS) OR COMMON FILL IN UNPAVED AREAS.
3. TRENCH WIDTH VARIES BASED ON PIPE SIZE AND DEPTH.
4. TRENCHES LOCATED IN THE ROAD SHOULDER SHALL BE TREATED THE SAME AS TRENCHES IN THE PAVED ROADWAY EXCEPT FOR PAVEMENT AND SURFACE RESTORATION WORK.
5. PROVIDE IMPERVIOUS TRENCH DAM(S) IN STONE BEDDING AS DIRECTED BY THE ENGINEER. SEE PIPE TRENCH DAM DETAIL.
6. CRUSHED STONE SHALL BE INSTALLED TO TOP OF PIPE FOR PVC AND DI PIPE AND TO SPRINGLINE FOR RC PIPE.

MDC Sewer Main Pipe Trench:
Scale: N.T.S

PERMIT - WETLANDS REGULATED ACTIVITY:
I hereby certify that at a meeting on _____ the East Granby Conservation Commission gave final approval to this Plan to conduct Regulated Wetland Activity in accordance with the East Granby Inland Wetlands and Watercourses Regulations.
Chairman _____ Date Signed _____
In accordance Section 11.5.1 of the Regulations, all work in connection with this Permit shall expire unless activity has been initiated by _____ (One Year from the Date of Approval).
In accordance with Section 11.4.2 all work in connection with this Permit shall be completed by _____ (five Years from date of Approval). In accordance with Section 11.4.2 the time period within which the Regulated Activity shall be conducted is limited to _____
Received for filing on _____ by _____ Town Clerk

SITE PLAN APPROVAL:
I hereby certify that at a meeting on _____ the East Granby Planning & Zoning Commission approved this Site Plan in accordance with the East Granby Zoning Regulations.
Chairman _____ Date Signed: _____
In accordance with Section X.A.2.h of the Zoning Regulations, work in connection with this Site Plan shall begin by _____ (18 months of the date of approval).
In accordance with CGS 8-3 (i), all work in connection with this Site Plan shall be completed by _____ (five yes of the date of approval).
Received at the Planning & Zoning Office on by _____ Title: _____

SPECIAL PERMIT APPROVAL:
I hereby certify that at a meeting on , the East Granby Planning & Zoning Commission approved a Special Permit in accordance with Section of the East Granby Zoning Regulations.
Chairman _____ Date Signed _____
In accordance with Section X.A.1.f. of the Zoning Regulations, this Special Permit shall expire on _____ (12 months of the date of approval) unless the authorized Special Permit activity has begun or unless an extension of time has been granted by the Commission.
In accordance with CGS 8-3d, any Special Permit shall be recorded in the Land Records.

Prepared For:
12 SCHOOL STREET, LLC
399 LEDYARD STREET, UNIT #12-S;
HARTFORD, CT 06114

Scale: As Noted
0' 0' 0' 0' 0' 0' 0' 0'
Date: 25 October 2023
Revisions:

Seal:

STATE OF CONNECTICUT · ROBERT C. SCHECHINGER, JR. · No. 559 · LICENSED LANDSCAPE ARCHITECT

Prepared By:
Robert C. Schechinger, Jr. ASLA
772 Farmington Avenue
Farmington, CT 06032
Telephone: (860) 478 - 7839
Email: BiffDesign@sbcglobal.net
Website: BiffLandDesign.com

Sheet No.
L.10

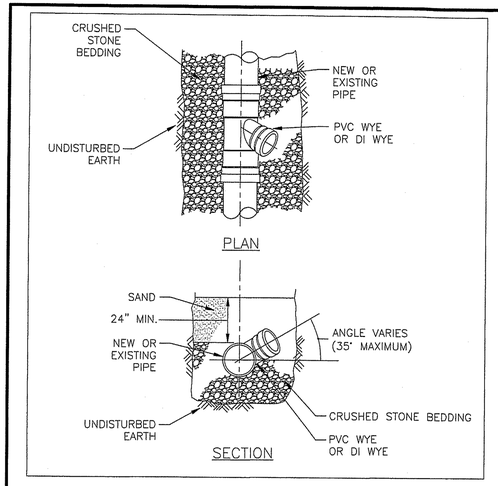

MDC PVC Or Ductile Iron Wye Branch:
Scale: N.T.S

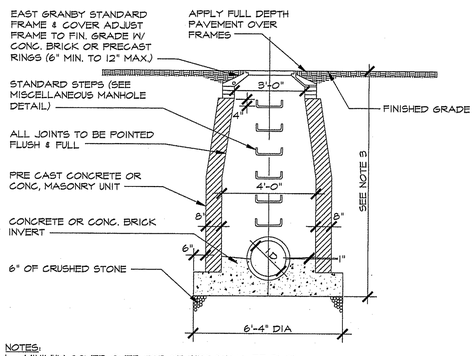

NOTES:
1. MINIMUM COVER OVER TOP OF PIPE SHALL BE 2'-0".
2. WALL THICKNESS SHALL BE SUFFICIENT TO MEET HS 20 LOADING.
3. WALL THICKNESS FOR STRUCTURES OVER 10' HIGH IS 12" FOR CONC. BLOCK UNITS. INSIDE DIMENSIONS REMAIN THE SAME
4. ALL PIPES SHALL BE CUT FLUSH WITH INSIDE WALLS

Storm Sewer Manhole:
Scale: N.T.S

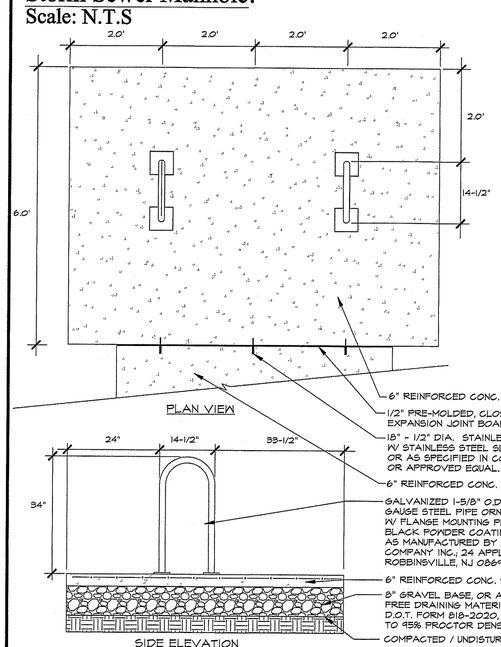

Concrete Bicycle Pad & Rack:
Scale: N.T.S.

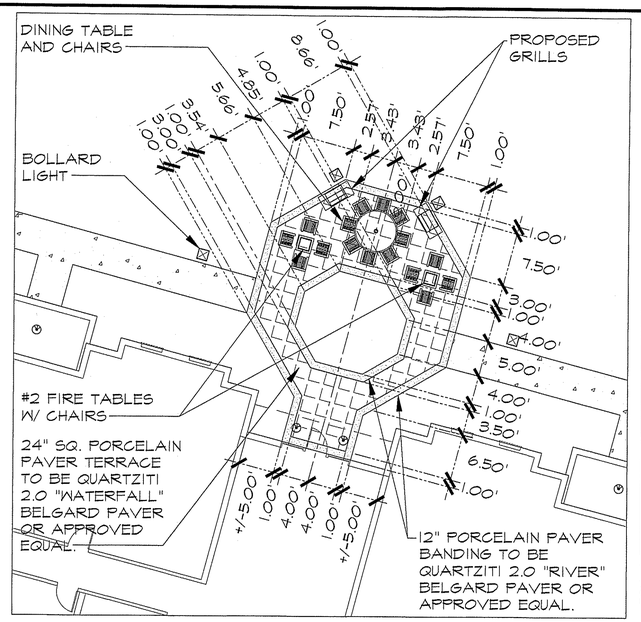

Ornamental Paver Rear Terrace Detail:
Scale: 1" = 10'

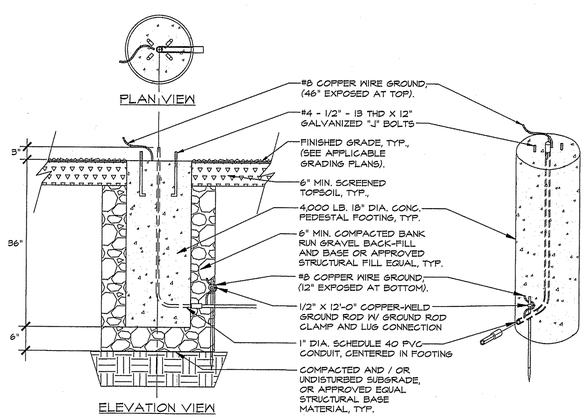

EVSE Electric Vehicle Charging Pedestal Footing:
Scale: N.T.S.

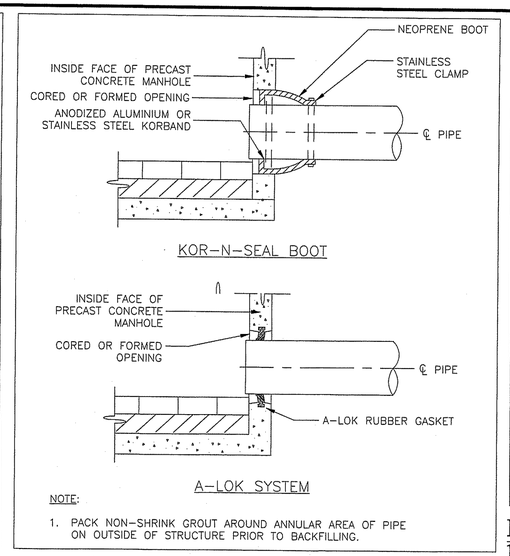

NOTE:
1. PACK NON-SHRINK GROUT AROUND ANNULAR AREA OF PIPE ON OUTSIDE OF STRUCTURE PRIOR TO BACKFILLING.

MDC Pipe Connection To Pre-Cast Structures:
Scale: N.T.S

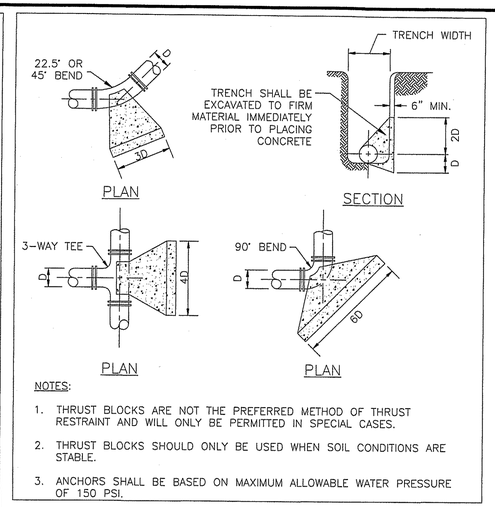

NOTES:
1. THRUST BLOCKS ARE NOT THE PREFERRED METHOD OF THRUST RESTRAINT AND WILL ONLY BE PERMITTED IN SPECIAL CASES.
2. THRUST BLOCKS SHOULD ONLY BE USED WHEN SOIL CONDITIONS ARE STABLE.
3. ANCHORS SHALL BE BASED ON MAXIMUM ALLOWABLE WATER PRESSURE OF 150 PSI.

MDC Concrete Trust Block; 12" Or Smaller Water Service Main:
Scale: N.T.S

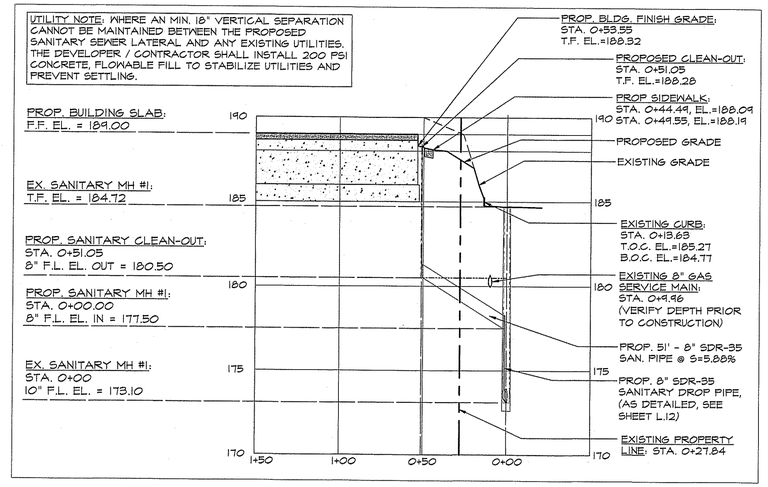

Proposed Sanitary Sewer Profile:
Scale: N.T.S.

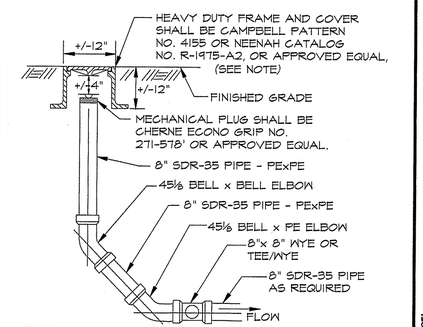

NOTE:
FRAMES AND COVERS LOCATED WITHIN PAVED AREAS MUST BE RATED FOR H20 LOADING.

Proposed Sanitary Sewer Clean-Out:
Scale: N.T.S.

WALL NOTES: 1.) FINAL WALL DESIGN DETAILS AND SPECIFICATIONS TO BE PROVIDED BY MANUFACTURER'S ENGINEER. 2.) WALL COMPONENTS TO BE "DIAMOND PRO - PS VICTORIAN FACE" MODEL; DANVILLE BLEND COLOR, AS MANUFACTURED BY BELGARD COMMERCIAL PAVERS AND RETAINING WALLS; OLDCASTLE APG CORPORATION, OR APPROVED EQUAL.

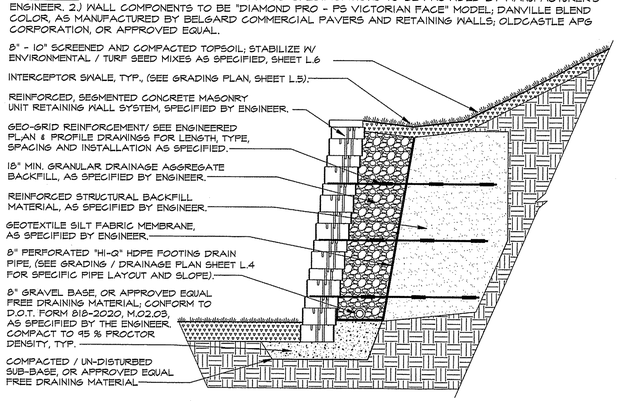

Ornamental CMU Reinforced Retaining Wall:
Scale: N.T.S.

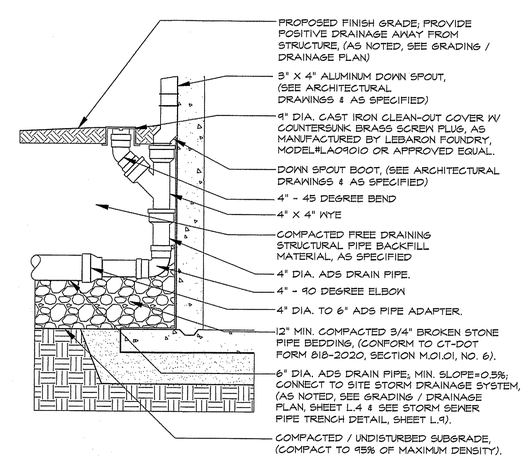

Rainwater Down Spout / Collector Pipe Connection:
Scale: N.T.S.

PERMIT - WETLANDS REGULATED ACTIVITY.
I hereby certify that at a meeting on _____ the East Granby Conservation Commission gave final approval to this Plan to conduct Regulated Wetland Activity in accordance with the East Granby Inland Wetlands and Watercourses Regulations.
Chairman _____ Date Signed _____
In accordance Section 11.5.1 or the Regulations, all work in connection with this Permit shall expire unless activity has been initiated by _____ (One Year from the Date of Approval).
In accordance with Section 11.4.2 all work in connection with this Permit shall be completed by _____ (Five Years from date of Approval), in accordance with Section 11.4.2 the time period within which the Regulated Activity shall be conducted is limited to _____
Received for filing on _____ by _____, Town Clerk

SITE PLAN APPROVAL.
I hereby certify that at a meeting on _____ the East Granby Planning & Zoning Commission approved this Site Plan in accordance with the East Granby Zoning Regulations.
Chairman: _____ Date Signed: _____
In accordance with Section X.A.2.h of the Zoning Regulations, work in connection with this Site Plan shall begin by _____ (18 months of the date of approval).
In accordance with CGS 8-3 (i), all work in connection with this Site Plan shall be completed by _____ (five yea of the date of approval).
Received at the Planning & Zoning Office on by _____ Title: _____

SPECIAL PERMIT APPROVAL.
I hereby certify that at a meeting on , the East Granby Planning & Zoning Commission approved a Special Permit in accordance with Section of the East Granby Zoning Regulations.
Chairman _____ Date Signed _____
In accordance with Section X.A.1.f. of the Zoning Regulations, this Special Permit shall expire on _____ (12 months of the date of approval) unless the authorized Special Permit activity has begun or unless an extension of time has been granted by the Commission.
In accordance with CGS 8-3d, any Special Permit shall be recorded in the Land Records.

Seal:

STATE OF CONNECTICUT · WILSON M. ALFORD, JR. · No. 9344 · LICENSED PROFESSIONAL ENGINEER

Prepared By:
Wilson M. Alford, Jr., L.S., P.E.
Alford Associates, Inc.
200 Pigeon Hill Road,
P.O. Box #484
Windsor, CT 06095
Telephone: (860) 688 - 7288
Facsimile: (860) 688 - 3485

ENGINEER NOTE: SEALED FOR STORM DRAINAGE, SANITARY SEWER AND RELATED DETAILS ONLY.

Drawing Title: Proposed Apartment Facility:
#12 & #14 School Street; East Granby, Connecticut 06026

DETAILS & GENERAL NOTES

Prepared For:
12 SCHOOL STREET, LLC
399 LEDYARD STREET, UNIT #12-S;
HARTFORD, CT 06114

Scale: As Noted
Date: 25 October 2023
Revisions:

Seal:

STATE OF CONNECTICUT · ROBERT C. SCHECHINGER, JR. · NO. 530 · LICENSED LANDSCAPE ARCHITECT

Prepared By:
Robert C. Schechinger, Jr. ASLA
772 Farmington Avenue
Farmington, CT 06032
Telephone: (860) 478 - 7839
Email: BifflDesign@sbcglobal.net
Website: BifflLandDesign.com

Sheet No.
L.11

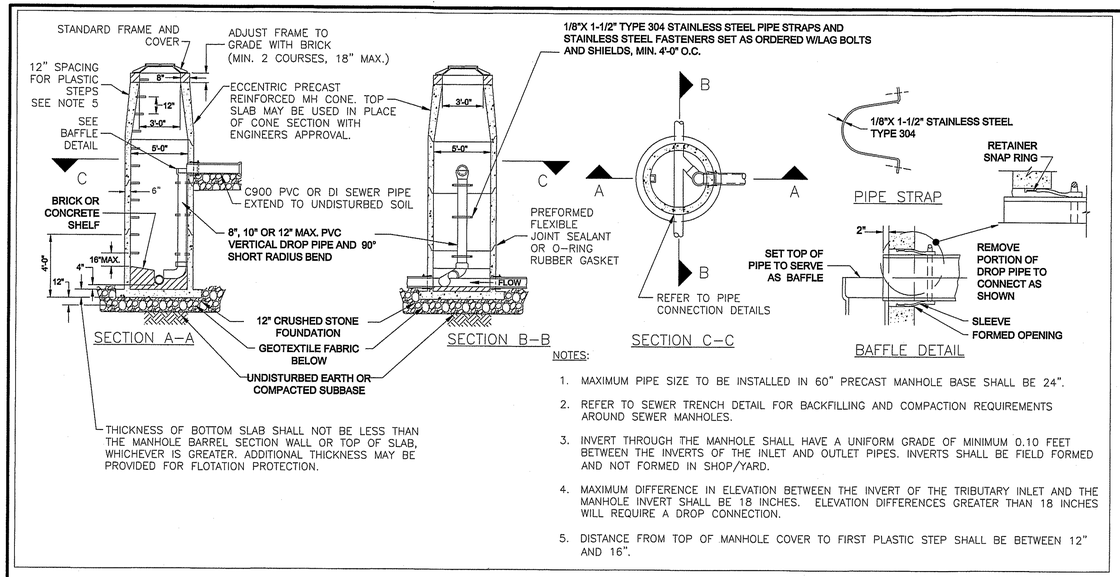

NOTES:

1. MAXIMUM PIPE SIZE TO BE INSTALLED IN 60" PRECAST MANHOLE BASE SHALL BE 24".
2. REFER TO SEWER TRENCH DETAIL FOR BACKFILLING AND COMPACTION REQUIREMENTS AROUND SEWER MANHOLES.
3. INVERT THROUGH THE MANHOLE SHALL HAVE A UNIFORM GRADE OF MINIMUM 0.10 FEET BETWEEN THE INVERTS OF THE INLET AND OUTLET PIPES. INVERTS SHALL BE FIELD FORMED AND NOT FORMED IN SHOP/YARD.
4. MAXIMUM DIFFERENCE IN ELEVATION BETWEEN THE INVERT OF THE TRIBUTARY INLET AND THE MANHOLE INVERT SHALL BE 18 INCHES. ELEVATION DIFFERENCES GREATER THAN 18 INCHES WILL REQUIRE A DROP CONNECTION.
5. DISTANCE FROM TOP OF MANHOLE COVER TO FIRST PLASTIC STEP SHALL BE BETWEEN 12" AND 16".

MDC Type IV Pre-Cast Concrete Sanitary Sewer Drop Manhole:
N.T.S.

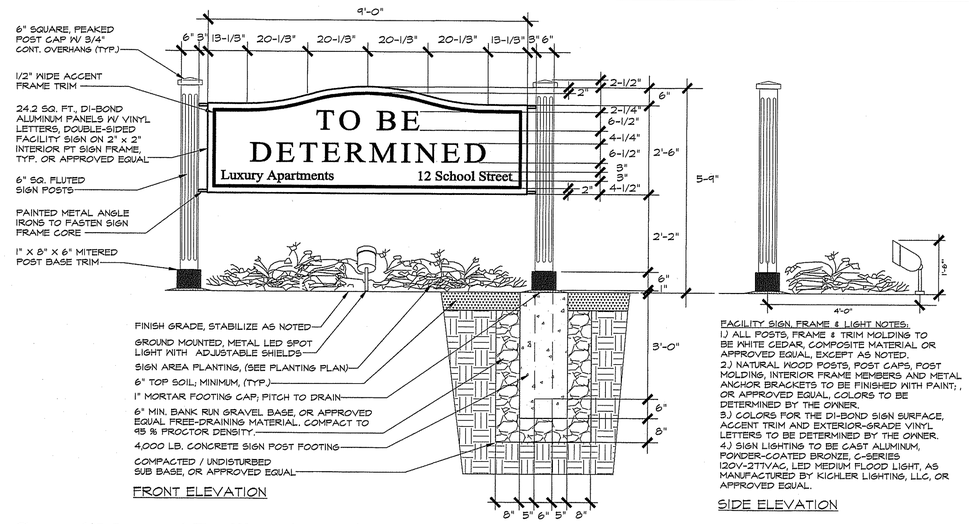

FACILITY SIGN FRAME & LIGHT NOTES:
1.) ALL POSTS, FRAME & TRIM MOLDING TO BE WHITE CEDAR, COMPOSITE MATERIAL OR APPROVED EQUAL, EXCEPT AS NOTED.
2.) NATURAL WOOD POSTS, POST CAPS, POST MOLDING, INTERIOR FRAME MEMBERS AND METAL ANCHOR BRACKETS TO BE FINISHED WITH PAINT; , OR APPROVED EQUAL, COLORS TO BE DETERMINED BY THE OWNER.
3.) COLORS FOR THE DI-BOND SIGN SURFACE, ACCENT TRIM AND EXTERIOR-GRADE VINYL LETTERS TO BE DETERMINED BY THE OWNER.
4.) SIGN LIGHTING TO BE CAST ALUMINUM, POWDER-COATED BRONZE, C-SERIES 120V-277VAC, LED MEDIUM FLOOD LIGHT, AS MANUFACTURED BY KICHLER LIGHTING, LLC, OR APPROVED EQUAL.

Ground-Mounted Facility Sign W/ LED Spot Lighting:
Scale: N.T.S

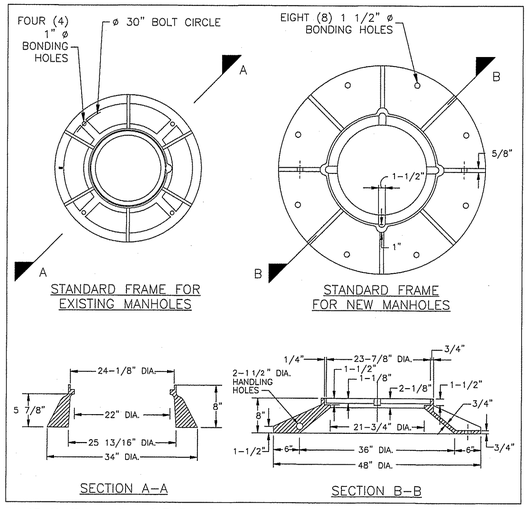

MDC Standard Manhole Frames:
Scale: N.T.S

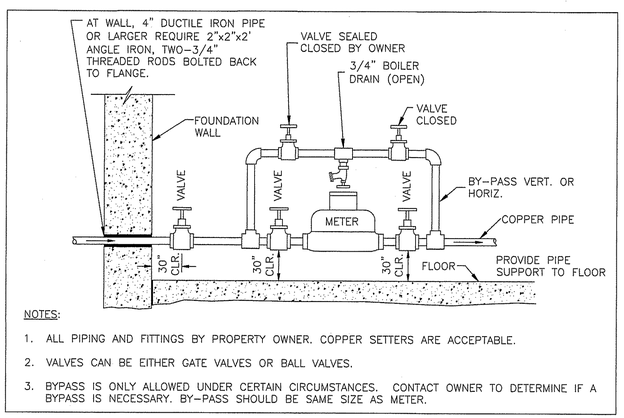

NOTES:

1. ALL PIPING AND FITTINGS BY PROPERTY OWNER. COPPER SETTERS ARE ACCEPTABLE.
2. VALVES CAN BE EITHER GATE VALVES OR BALL VALVES.
3. BYPASS IS ONLY ALLOWED UNDER CERTAIN CIRCUMSTANCES. CONTACT OWNER TO DETERMINE IF A BYPASS IS NECESSARY. BY-PASS SHOULD BE SAME SIZE AS METER.

MDC Standard Meter Installation With By-Pass on 1/2" Services and Larger Within the Building: Scale: N.T.S.

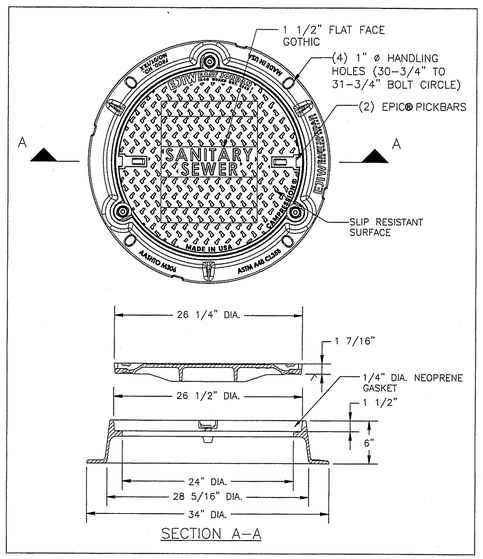

MDC Standard 26" Watertight Frame & Cover:
Scale: N.T.S

PERMIT - WETLANDS REGULATED ACTIVITY:
I hereby certify that at a meeting on _____ the East Granby Conservation Commission gave final approval to this Plan to conduct Regulated Wetland Activity in accordance with the East Granby Inland Wetlands and Watercourses Regulations.
_____
Chairman _____ Date Signed
In accordance Section 11.5.1 or the Regulations, all work in connection with this Permit shall expire unless activity has been initiated by _____ (One Year from the Date of Approval).
In accordance with Section 11.4.2 all work in connection with this Permit shall be completed by _____ (Five Years from date of Approval). In accordance with Section 11.4.2 the time period within which the Regulated Activity shall be conducted is limited to _____
Received for filing on _____ by _____, Town Clerk

SITE PLAN APPROVAL:
I hereby certify that at a meeting on _____ the East Granby Planning & Zoning Commission approved this Site Plan in accordance with the East Granby Zoning Regulations.
Chairman: _____ Date Signed:
In accordance with Section X.A.2h of the Zoning Regulations, work in connection with this Site Plan shall begin by _____ (18 months of the date of approval).
In accordance with CGS 8-3 (i), all work in connection with this Site Plan shall be completed by _____ (five yeo of the date of approval).
Received at the Planning & Zoning Office on by _____ Title: _____

SPECIAL PERMIT APPROVAL:
I hereby certify that at a meeting on , the East Granby Planning & Zoning Commission approved a Special Permit in accordance with Section of the East Granby Zoning Regulations.
Chairman: _____ Date Signed:
In accordance with Section X.A.1.f. of the Zoning Regulations, this Special Permit shall expire on _____ (12 months of the date of approval) unless the authorized Special Permit activity has begun or unless an extension of time has been granted by the Commission.
In accordance with CGS 8-3d, any Special Permit shall be recorded in the Land Records.

Seal:

STATE OF CONNECTICUT WILSON M. ALFORD, JR. No. 9344 LICENSED PROFESSIONAL ENGINEER

Prepared By:
Wilson M. Alford, Jr., L.S., P.E.
Alford Associates, Inc.
200 Pigeon Hill Road,
P.O. Box #484
Windsor, CT 06095
Telephone: (860) 688 - 7288
Facsimile: (860) 688 - 3485

ENGINEER NOTE: SEALED FOR STORM DRAINAGE, SANITARY SEWER AND RELATED DETAILS ONLY.

Drawing Title: Proposed Apartment Facility:
#12 & #14 School Street; East Granby, Connecticut 06026
DETAILS & GENERAL NOTES

Prepared For:
12 SCHOOL STREET, LLC
399 LEDYARD STREET, UNIT #12-S;
HARTFORD, CT 06114

Scale: As Noted

Date: 25 October 2023

Revisions: _____

Seal:

STATE OF CONNECTICUT ROBERT C. SCHECHINGER, JR. NO. 539 LICENSED LANDSCAPE ARCHITECT

Prepared By:
Robert C. Schechinger, Jr. ASLA
772 Farmington Avenue
Farmington, CT 06032
Telephone: (860) 478 - 7839
Email: Biff.Design@sbcglobal.net
Website: BiffLandDesign.com

Sheet No.
L.12

FRONT ELEVATION (FROM PARKING LOT)

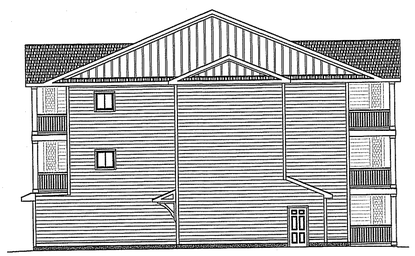

RIGHT ELEVATION

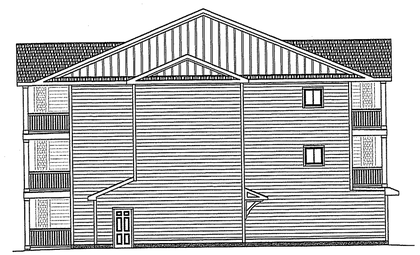

LEFT ELEVATION

REAR ELEVATION

NOT TO SCALE

DON HAMMERBERG ASSOC.
ARCHITECTS
ARCHITECTURE • CONSULTING • INTERIORS
772 FARMINGTON AVE.
FARMINGTON, CT 06032
TEL: (860) 677-9501
WWW.DHA-Architects.com

CONSULTANT

APARTMENT BUILDING
14-16 SCHOOL STREET
EAST GRANBY, CT

BUILDING ELEVATIONS

DRAWN BY:
HANS WINKEL

REVISIONS

ID	DATE	DESCRIPTION

SHEET NO.

A-1

PROJECT NO. 2177

DATE 09.07.2023

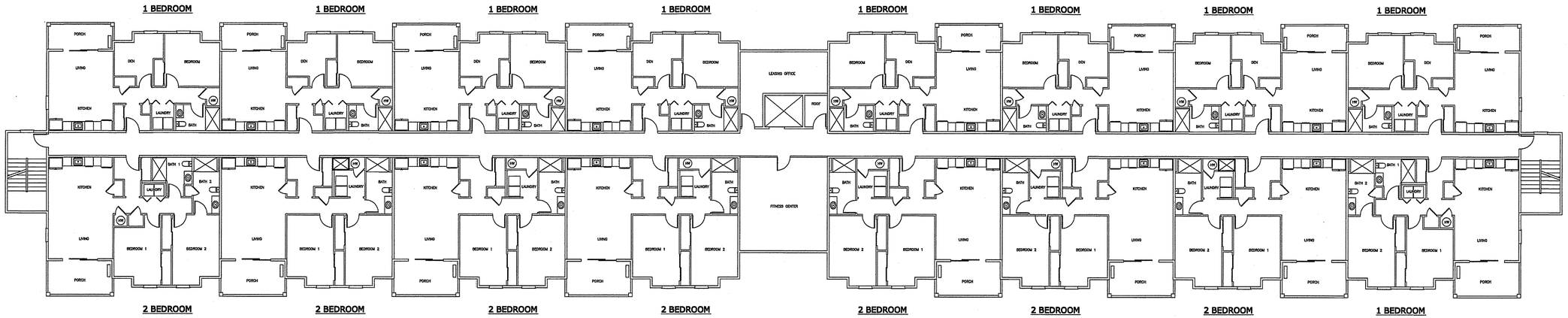

3RD FLOOR PLAN

(8) 1 BEDROOM / (8) 2 BEDROOM

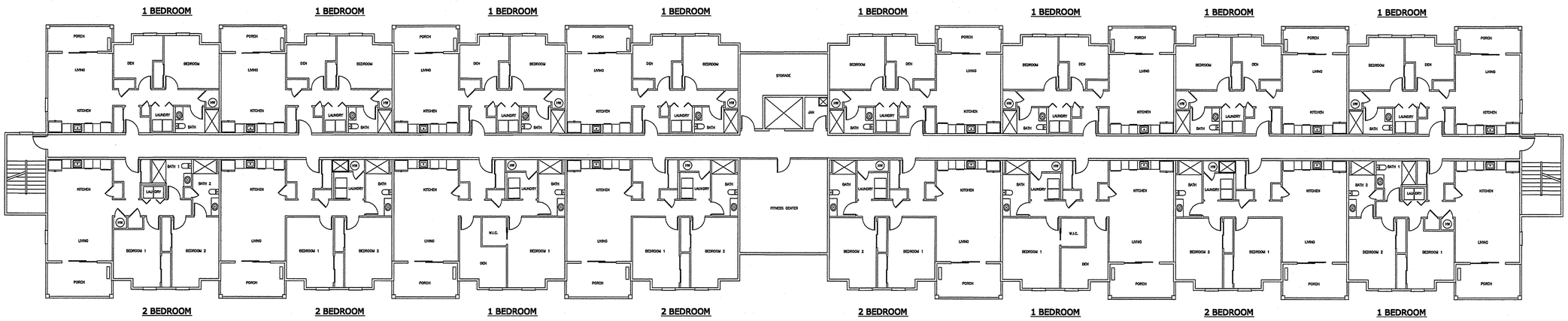

2ND FLOOR PLAN

(10) 1 BEDROOM / (6) 2 BEDROOM

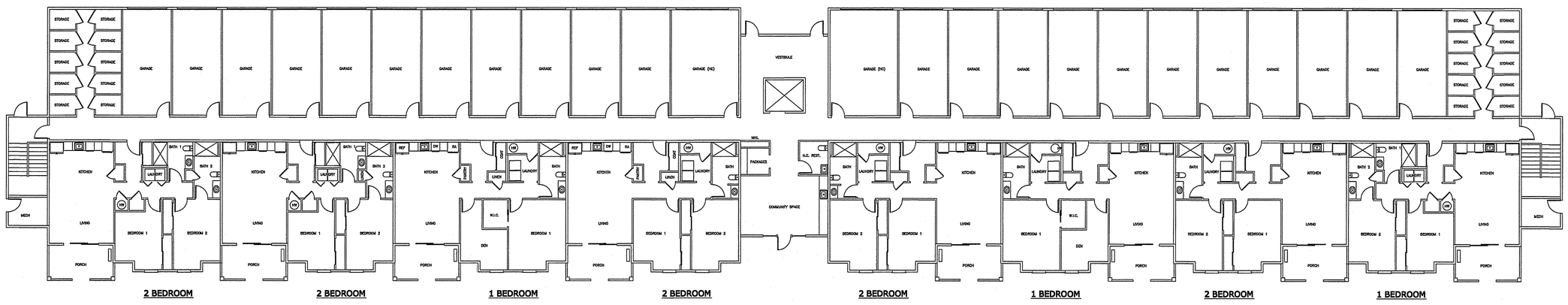

1ST FLOOR PLAN

(2) 1 BEDROOM / (6) 2 BEDROOM / (24) GARAGES

TOTAL UNIT COUNT: (20) 1 BEDROOM / (20) 2 BEDROOM

NOT TO SCALE

DON HAMMERBERG ASSOC.
ARCHITECTS
ARCHITECTURE • CONSULTING • INTERIORS
772 FARMINGTON AVE.
FARMINGTON, CT 06032
TEL: (860) 677-9201
WWW.DHA-Architects.com

CONSULTANT

APARTMENT BUILDING
14-16 SCHOOL STREET
EAST GRANBY, CT

FLOOR PLANS

DRAWN BY:
HANS WINKEL

REVISIONS

ID	DATE	DESCRIPTION

SHEET NO.

A-2

PROJECT NO. 2177

DATE 09.07.2023