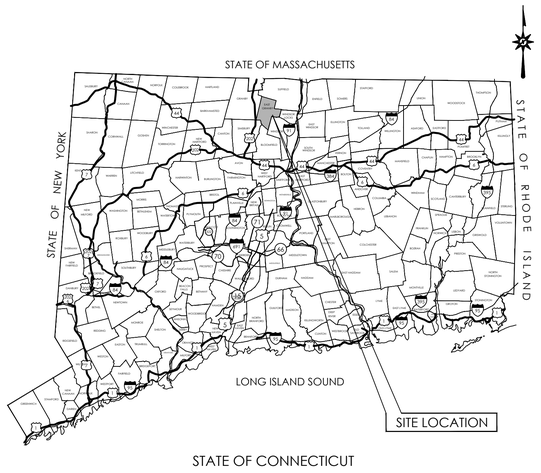

LOCATION MAP

N.T.S.

PROPOSED MANUFACTURING & INDUSTRIAL DEVELOPMENT ISSUED FOR LOCAL LAND DEVELOPMENT PERMITTING

50-58 RAINBOW ROAD
EAST GRANBY, CT 06026

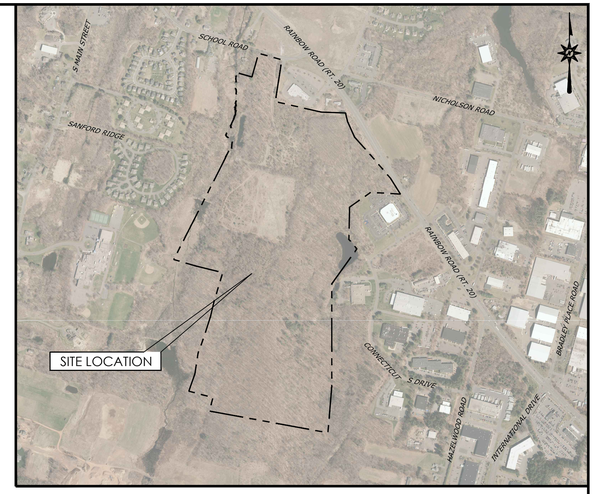

VICINITY MAP

SCALE: 1"=800'

PREPARED FOR:

SL 50-58 RAINBOW ROAD LLC
195 MORRISTOWN ROAD
BASKING RIDGE, NJ 07920

CONTENTS

Sheet Number	Sheet Title
CV-1	COVER SHEET
GN-1	GENERAL NOTES
BS-1	BOUNDARY SURVEY
DM-0	OVERALL DEMOLITION PLAN
DM-1	DEMOLITION PLAN
DM-2	DEMOLITION PLAN
DM-3	DEMOLITION PLAN
DM-4	DEMOLITION PLAN
DM-5	DEMOLITION PLAN
DM-6	DEMOLITION PLAN
DM-7	DEMOLITION PLAN
DM-8	DEMOLITION PLAN
SP-0	OVERALL SITE PLAN
SP-1	SITE PLAN
SP-2	SITE PLAN
SP-3	SITE PLAN
SP-4	SITE PLAN
SP-5	SITE PLAN
SP-6	SITE PLAN
SP-7	SITE PLAN
SP-8	SITE PLAN
TT-1	OVERALL TRUCK TURNING PLAN
TT-2	OVERALL TRUCK TURNING PLAN
GD-0	OVERALL GRADING PLAN
GD-1	GRADING PLAN
GD-2	GRADING PLAN
GD-3	GRADING PLAN
GD-4	GRADING PLAN
GD-5	GRADING PLAN
GD-6	GRADING PLAN
GD-7	GRADING PLAN
GD-8	GRADING PLAN
DR-0	OVERALL DRAINAGE PLAN
DR-1	DRAINAGE PLAN
DR-2	DRAINAGE PLAN
DR-3	DRAINAGE PLAN
DR-4	DRAINAGE PLAN
DR-5	DRAINAGE PLAN
DR-6	DRAINAGE PLAN
DR-7	DRAINAGE PLAN
DR-8	DRAINAGE PLAN
SU-0	OVERALL SITE UTILITY PLAN
SU-1	SITE UTILITY PLAN
SU-2	SITE UTILITY PLAN
SU-3	SITE UTILITY PLAN
SU-4	SITE UTILITY PLAN
SU-5	SITE UTILITY PLAN
SU-6	SITE UTILITY PLAN
SU-7	SITE UTILITY PLAN
SU-8	SITE UTILITY PLAN
EC-0	OVERALL SEDIMENT AND EROSION CONTROL PLAN
EC-1	SEDIMENT AND EROSION CONTROL PLAN
EC-2	SEDIMENT AND EROSION CONTROL PLAN
EC-3	SEDIMENT AND EROSION CONTROL PLAN
EC-4	SEDIMENT AND EROSION CONTROL PLAN
EC-5	SEDIMENT AND EROSION CONTROL PLAN
EC-6	SEDIMENT AND EROSION CONTROL PLAN
EC-7	SEDIMENT AND EROSION CONTROL PLAN
EC-8	EROSION AND SEDIMENT CONTROL PLAN
EC-9	SEDIMENT AND EROSION CONTROL NOTES
EC-10	SEDIMENT AND EROSION CONTROL DETAILS
EC-11	SEDIMENT AND EROSION CONTROL DETAILS
LL-0	OVERALL LANDSCAPE PLAN
LL-1	LANDSCAPE PLAN
LL-2	LANDSCAPE PLAN
LL-3	LANDSCAPE PLAN
LL-4	LANDSCAPE PLAN
LL-5	LANDSCAPE PLAN
LL-6	LANDSCAPE PLAN
LL-7	LANDSCAPE PLAN
LL-8	LANDSCAPE PLAN
LL-9	LANDSCAPE NOTES AND DETAILS
LP-0	OVERALL LIGHTING PLAN
LP-1	LIGHTING PLAN
LP-2	LIGHTING PLAN
LP-3	LIGHTING PLAN
LP-4	LIGHTING PLAN
LP-5	LIGHTING PLAN
LP-6	LIGHTING PLAN
LP-7	LIGHTING PLAN
LP-8	LIGHTING PLAN
LP-9	LIGHTING NOTES AND DETAILS
DN-1	DETAILS
DN-2	DETAILS
DN-3	DETAILS
DN-4	DETAILS
DN-5	DETAILS
DN-6	DETAILS
DN-7	DETAILS
DN-8	DETAILS

CAD FILE: CV230088801

PREPARED BY:

BL Companies
ARCHITECTURE
ENGINEERING
ENVIRONMENTAL
LAND SURVEYING

100 CONSTITUTION PLAZA, 10TH FLOOR
HARTFORD, CONNECTICUT 06103
(860) 249-2200
(860) 249-2400 Fax

FOR PERMITTING PURPOSES ONLY
NOT RELEASED FOR CONSTRUCTION

DEVELOPER:

SL 50-58 RAINBOW ROAD LLC
195 MORRISTOWN ROAD
BASKING RIDGE, NJ 07920

OWNER:

SL 50-58 RAINBOW ROAD LLC
195 MORRISTOWN ROAD
BASKING RIDGE, NJ 07920

SUBCONSULTANTS:

STATE OF CONNECTICUT
TIMOTHY A. HOYLE
38119
LICENSED PROFESSIONAL ENGINEER

DATES

ISSUE DATE: JUNE 3, 2025
REVISION:

©2025 BL COMPANIES, INC. THESE DRAWINGS SHALL NOT BE UTILIZED BY ANY PERSON, FIRM OR CORPORATION WITHOUT THE SPECIFIC WRITTEN PERMISSION OF BL COMPANIES.

SITE WORK GENERAL NOTES

1. THESE PLANS ARE FOR PERMITTING PURPOSES ONLY AND ARE NOT FOR CONSTRUCTION.
2. ALL CONSTRUCTION SHALL COMPLY WITH THE PROJECT SPECIFICATION MANUAL; MUNICIPAL STANDARDS AND SPECIFICATIONS, CT DEPARTMENT OF TRANSPORTATION STANDARDS AND SPECIFICATIONS, 2010 ADA STANDARDS, AND STATE BUILDING CODE IN THE ABOVE REFERENCED INCREASING HIERARCHY. IF SPECIFICATIONS ARE IN CONFLICT, THE MORE STRINGENT SPECIFICATION SHALL APPLY. ALL CONSTRUCTION SHALL BE PERFORMED IN ACCORDANCE WITH ALL APPLICABLE OSHA, FEDERAL, STATE AND LOCAL REGULATIONS.
3. REFER TO OTHER PLANS BY OTHER DISCIPLINES, DETAILS AND PROJECT MANUAL FOR ADDITIONAL INFORMATION. THE CONTRACTOR SHALL VERIFY ALL SITE AND BUILDING CONDITIONS IN THE FIELD AND CONTACT THE CIVIL ENGINEER AND ARCHITECT IF THERE ARE ANY QUESTIONS OR CONFLICTS REGARDING THE CONSTRUCTION DOCUMENTS AND/OR FIELD CONDITIONS, SO THAT APPROPRIATE REVISIONS CAN BE MADE PRIOR TO BIDDING. ANY CONFLICT BETWEEN THE DRAWINGS AND SPECIFICATIONS SHALL BE CONFIRMED WITH THE OWNER'S CONSTRUCTION MANAGER PRIOR TO BIDDING.
4. DO NOT INTERRUPT EXISTING UTILITIES SERVICING FACILITIES OCCUPIED AND USED BY THE OWNER OR OTHERS DURING OCCUPIED HOURS EXCEPT WHEN SUCH INTERRUPTIONS HAVE BEEN AUTHORIZED IN WRITING BY THE OWNER AND THE LOCAL MUNICIPALITIES. INTERRUPTIONS SHALL ONLY OCCUR AFTER ACCEPTABLE TEMPORARY SERVICE HAS BEEN PROVIDED.
5. THE CONTRACTOR SHALL ABIDE BY ALL OSHA, FEDERAL, STATE, AND LOCAL REGULATIONS WHEN OPERATING CRANES, BOOMS, HOISTS, ETC. IN CLOSE PROXIMITY TO OVERHEAD ELECTRIC LINES. IF CONTRACTOR MUST OPERATE EQUIPMENT CLOSE TO ELECTRIC LINES, CONTACT POWER COMPANY TO MAKE ARRANGEMENTS FOR PROPER SAFEGUARDS. ANY UTILITY COMPANY FEES SHALL BE PAID FOR BY THE CONTRACTOR.
6. THE CONTRACTOR SHALL PROVIDE AS-BUILT RECORD DRAWINGS OF ALL CONSTRUCTION (INCLUDING UNDERGROUND UTILITIES AND STORMWATER SYSTEM) TO THE OWNER AT THE END OF CONSTRUCTION.
7. THE ARCHITECT OR ENGINEER IS NOT RESPONSIBLE FOR SITE SAFETY MEASURES TO BE EMPLOYED DURING CONSTRUCTION. THE ARCHITECT AND ENGINEER HAVE NO CONTRACTUAL DUTY TO CONTROL THE SAFEST METHODS OR MEANS OF THE WORK, JOB SITE RESPONSIBILITIES, SUPERVISION OR TO SUPERVISE SAFETY AND DOES NOT VOLUNTARILY ASSUME ANY SUCH DUTY OR RESPONSIBILITY.
8. THE CONTRACTOR SHALL COMPLY WITH CFR 29 PART 1926 FOR EXCAVATION, TRENCHING, AND TRENCH PROTECTION REQUIREMENTS.
9. INFORMATION ON EXISTING UTILITIES AND STORM DRAINAGE SYSTEMS HAS BEEN COMPILED FROM AVAILABLE INFORMATION INCLUDING UTILITY COMPANY AND MUNICIPAL OR COUNTY OR STATE RECORD MAPS AND/OR FIELD SURVEY AND IS NOT GUARANTEED CORRECT OR COMPLETE. UTILITIES AND STORM DRAINAGE SYSTEMS ARE SHOWN TO ALERT THE CONTRACTOR TO THEIR PRESENCE AND THE CONTRACTOR IS SOLELY RESPONSIBLE FOR DETERMINING ACTUAL LOCATIONS AND ELEVATIONS OF ALL UNDERGROUND AND OVERHEAD UTILITIES AND STORM DRAINAGE SYSTEMS INCLUDING SERVICES. PRIOR TO DEMOLITION OR CONSTRUCTION, THE CONTRACTOR SHALL CONTACT CT CALL BEFORE YOU DIG (CBYD) 72 HOURS BEFORE COMMENCEMENT OF WORK AT (800) 922-4455 OR AT 811 AND VERIFY ALL UTILITY AND STORM DRAINAGE SYSTEM LOCATIONS. THE CONTRACTOR SHALL EMPLOY THE USE OF A UTILITY LOCATING COMPANY TO PROVIDE SUBSURFACE UTILITY ENGINEERING CONSISTING OF DESIGNATING UTILITIES AND STORM PIPING ON PRIVATE PROPERTY WITHIN THE CONTRACT LIMIT AND CONSISTING OF DESIGNATING AND LOCATING WHERE PROPOSED UTILITIES AND STORM PIPING CROSS EXISTING UTILITIES AND STORM PIPING WITHIN THE CONTRACT LIMITS.
10. DO NOT SCALE DRAWINGS. DIMENSIONS GOVERN OVER SCALED DIMENSIONS.
11. SHOULD CONFLICTING INFORMATION BE FOUND WITHIN THE CONTRACT DOCUMENTS, IT IS INCUMBENT UPON THE CONTRACTOR TO REQUEST CLARIFICATION PRIOR TO PROCEEDING WITH THE WORK. FOR BUDGETING PURPOSES, THE CONTRACTOR SHALL CARRY THE COST OF THE HIGHER QUALITY/QUANTITY OF WORK UNTIL SUCH TIME THAT A CLARIFICATION IS RENDERED.
12. ALL CONTRACTORS AND SUBCONTRACTORS SHALL OBTAIN COMPLETE DRAWING PLAN SETS FOR BIDDING AND CONSTRUCTION. PLAN SETS OR PLAN SET ELECTRONIC POSTINGS SHALL NOT BE DISASSEMBLED INTO PARTIAL PLAN SETS FOR USE BY CONTRACTORS AND SUBCONTRACTORS OF INDIVIDUAL TRADES. IT SHALL BE THE CONTRACTOR'S AND SUBCONTRACTOR'S RESPONSIBILITY TO OBTAIN COMPLETE PLAN SETS OR COMPLETE PLAN SET ELECTRONIC POSTINGS FOR USE IN BIDDING AND CONSTRUCTION.
13. ALL NOTES AND DIMENSION DESIGNATED AS "TYPICAL" OR "TYP" APPLY TO ALL LIKE OR SIMILAR CONDITIONS THROUGHOUT THE PROJECT.
14. CONTRACTOR(S) TO TAKE AND VERIFY ALL DIMENSIONS AND CONDITIONS OF THE WORK AND BE RESPONSIBLE FOR COORDINATION OF SAME. FIELD VERIFY ALL EXISTING CONDITIONS PRIOR TO START OF WORK.
15. BL COMPANIES WILL PREPARE FINAL CONSTRUCTION DOCUMENTS SUITABLE FOR BIDDING AND CONSTRUCTION. PROGRESS SETS OF THESE DOCUMENTS ARE NOT SUITABLE FOR THOSE PURPOSES. IF CLIENT ELECTS TO SOLICIT BIDS OR ENTER INTO CONSTRUCTION CONTRACTS UTILIZING CONSTRUCTION DOCUMENTS THAT ARE NOT YET FINAL, CONSULTANT SHALL NOT BE RESPONSIBLE FOR ANY COSTS OR DELAY ARISING AS A RESULT.
16. NO CONSTRUCTION OR DEMOLITION SHALL BEGIN UNTIL APPROVAL OF THE FINAL PLANS IS GRANTED BY ALL GOVERNING AND REGULATORY AGENCIES.
17. THE OWNER IS RESPONSIBLE FOR OBTAINING ALL NECESSARY ZONING PERMITS REQUIRED BY GOVERNMENT AGENCIES PRIOR TO CONSTRUCTION. THE CONTRACTOR SHALL CONTACT AND OBTAIN FROM MUNICIPAL SOURCES ALL CONSTRUCTION PERMITS, INCLUDING ANY STATE DOT PERMITS, SEWER AND WATER CONNECTION PERMITS, AND ROADWAY CONSTRUCTION PERMITS. THE CONTRACTOR SHALL POST ALL BONDS, PAY ALL FEES, PROVIDE PROOF OF INSURANCE AND PROVIDE TRAFFIC CONTROL NECESSARY FOR THIS WORK EXCEPT CTDOT ENCROACHMENT PERMIT BOND.
18. THE CONTRACTOR SHALL SUBMIT SHOP DRAWINGS OF ALL PRODUCTS AND MATERIALS PER PLANS AND SPECIFICATIONS TO THE OWNER AND CIVIL ENGINEER FOR REVIEW AND APPROVAL PRIOR TO FABRICATION OR DELIVERY TO THE SITE. ALLOW A MINIMUM OF 14 WORKING DAYS FOR REVIEW.
19. THE CONTRACTOR SHALL FOLLOW THE SEQUENCE OF CONSTRUCTION NOTES PROVIDED ON THE SEDIMENT AND EROSION CONTROL PLAN.
20. THE CONTRACTOR SHALL REFERENCE ARCHITECTURAL PLANS FOR EXACT DIMENSIONS AND CONSTRUCTION DETAILS OF BUILDING, RAISED CONCRETE SIDEWALKS, LANDINGS, AND RAMPS.
21. SHOULD ANY UNCHARTED OR INCORRECTLY CHARTED, EXISTING PIPING OR OTHER UTILITY BE UNCOVERED DURING EXCAVATION, CONSULT THE CIVIL ENGINEER IMMEDIATELY FOR DIRECTIONS BEFORE PROCEEDING FURTHER WITH WORK IN THIS AREA.
22. ALL SITE DIMENSIONS ARE REFERENCED TO THE FACE OF CURBS OR EDGE OF PAVING AS APPLICABLE UNLESS OTHERWISE NOTED. ALL BUILDING DIMENSIONS ARE REFERENCED TO THE OUTSIDE FACE OF THE STRUCTURE.
23. THE CONTRACTOR SHALL PROVIDE AND MAINTAIN TRAFFIC DEVICES FOR PROTECTION OF VEHICLES AND PEDESTRIANS CONSISTING OF DRUMS, BARRIERS, SIGNS, LIGHTS, FENCES, TEMPORARY WALKWAYS, TRAFFIC CONTROLLERS AND UNIFORMED TRAFFIC OFFICERS AS REQUIRED OR AS ORDERED BY THE ENGINEER OR AS REQUIRED BY THE LOCAL GOVERNING AUTHORITIES OR AS REQUIRED BY PERMIT STIPULATIONS OR AS REQUIRED BY THE OWNER. CONTRACTOR SHALL MAINTAIN ALL TRAFFIC LANES AND PEDESTRIAN WALKWAYS FOR USE AT ALL TIMES UNLESS WRITTEN APPROVAL FROM THE APPROPRIATE GOVERNING AGENCY IS GRANTED.
24. TRAFFIC CONTROL SIGNAGE SHALL CONFORM TO THE STATE DOT STANDARD DETAIL SHEETS AND THE MANUAL OF UNIFORM TRAFFIC CONTROL DEVICES. SIGNS SHALL BE INSTALLED PLUMB WITH THE EDGE OF THE SIGN 2' OFF THE FACE OF THE CURB, AND WITH 7' VERTICAL CLEARANCE UNLESS OTHERWISE DETAILED OR NOTED.
25. REFER TO DETAIL SHEETS FOR PAVEMENT, CURBING, AND SIDEWALK INFORMATION.
26. THE CONTRACT LIMIT IS THE PROPERTY LINE UNLESS OTHERWISE SPECIFIED OR SHOWN ON THE CONTRACT DRAWINGS.
27. THE CONTRACTOR SHALL SUBMIT A SHOP DRAWING OF THE PAVEMENT MARKING PAINT MIXTURE PRIOR TO STRIPING.
28. PAVEMENT MARKING KEY:

    4" SYDL 4" SOLID YELLOW DOUBLE LINE
    4" SYL 4" SOLID YELLOW LINE
    4" SWL 4" SOLID WHITE LINE
    12" SWSB 12" SOLID WHITE STOP BAR
    4" BWL 4" BROKEN WHITE LINE 10' STRIPE 30' SPACE

29. PARKING SPACES SHALL BE STRIPED WITH 4" SWL; HATCHED AREA SHALL BE STRIPED WITH 4" SWL AT A 45° ANGLE, 2' ON CENTER. HATCHING, SYMBOLS, AND STRIPING FOR HANDICAPPED SPACES SHALL BE PAINTED WHITE. OTHER MARKINGS SHALL BE PAINTED WHITE OR AS NOTED.
30. ALL PAVEMENT MARKINGS SHALL HAVE TWO COATS OF PAVEMENT MARKINGS APPLIED TO STRIPING. PAVEMENT MARKINGS SHALL BE REFLECTIVE IN ACCORDANCE WITH STATE DOT SPECIFICATIONS.
31. PAVEMENT MARKINGS SHALL BE HOT APPLIED TYPE IN ACCORDANCE WITH STATE DOT SPECIFICATIONS, UNLESS WHERE EPOXY RESIN PAVEMENT MARKINGS ARE INDICATED. (verify with client for pavement marking types. modify 30 if thermoplastic is used.)
32. THE CONTRACTOR SHALL RESTORE ANY UTILITY STRUCTURE, DRAINAGE STRUCTURE, PIPE, UTILITY, PAVEMENT, CURBS, SIDEWALKS, LANDSCAPED AREAS, SWALE, PAVEMENT MARKINGS, OR SIGNAGE DISTURBED DURING DEMOLITION AND/OR CONSTRUCTION TO THEIR ORIGINAL CONDITION OR BETTER, AS APPROVED BY THE CIVIL ENGINEER, AND TO THE SATISFACTION OF THE OWNER AND MUNICIPALITY.
33. EXISTING BOUNDARY AND TOPOGRAPHY IS BASED ON DRAWING TITLED "BOUNDARY SURVEY"; SCALE 1"=150', DATED 07/26/2021, BY BL COMPANIES INC.
34. ALTERNATIVE METHODS AND PRODUCTS OTHER THAN THOSE SPECIFIED MAY BE USED IF REVIEWED AND APPROVED BY THE OWNER, CIVIL ENGINEER, AND APPROPRIATE REGULATORY AGENCY PRIOR TO INSTALLATION DURING THE BIDDING PROCESS.
35. CTDOT ENCROACHMENT PERMIT SHALL BE OBTAINED BY CONTRACTOR WHO SHALL PAY ALL FEES, PROVIDE PROOF OF INSURANCE AND PROVIDE TRAFFIC PROTECTION NECESSARY FOR THE WORK. THE OWNER SHALL POST CTDOT ENCROACHMENT PERMIT BOND.
36. AN EROSION CONTROL BOND IS REQUIRED TO BE POSTED BY THE CONTRACTOR BEFORE THE START OF ANY ACTIVITY ON OR OFF SITE. THE AMOUNT OF THE EROSION CONTROL BOND WILL BE DETERMINED BY THE AUTHORITY HAVING JURISDICTION.
37. THE PROJECT PARCEL IS LOCATED PARTLY WITHIN A FEMA DESIGNATED FLOOD HAZARD AREA (ZONE AE).
38. THERE ARE WETLANDS LOCATED ON THE SITE FLAGGED BY JMM WETLAND CONSULTING SERVICES, LLC ON 03/19/2025 AND FIELD LOCATED BY BL COMPANIES ON 04/28/2025.
39. 12" SWSB (STOP BAR) AND 4" SYDL AND SWL PAVEMENT MARKINGS LOCATED IN DRIVEWAYS AND IN STATE HIGHWAY SHALL BE EPOXY RESIN TYPE ACCORDING TO CONNDOT SPECIFICATIONS.
40. FIRE LANES SHALL BE ESTABLISHED AND PROPERLY DESIGNATED IN ACCORDANCE WITH THE REQUIREMENTS OF THE FIRE DISTRICT FIRE MARSHAL.
41. THE CONTRACTOR SHALL REMOVE CONFLICTING PAVEMENT MARKINGS IN THE ROADWAY BY METHOD APPROVED BY THE AUTHORITY HAVING JURISDICTION OR DOT AS APPLICABLE FOR THE LOCATION OF THE WORK.
42. ALL ADA DESIGNATED PARKING STALLS, ACCESS AISLES AND PEDESTRIAN WALKWAYS SHALL CONFORM TO THE CURRENT VERSION OF THE AMERICANS WITH DISABILITIES ACT STANDARDS FOR ACCESSIBLE DESIGN AND ANSI STANDARDS AND AS MAY BE SUPERCEDED BY THE STATE BUILDING CODE.
43. CONSTRUCTION OCCURRING ON THIS SITE SHALL COMPLY WITH NFPA 241 STANDARD FOR SAFEGUARDING CONSTRUCTION, ALTERATION AND DEMOLITION OPERATIONS, AND CHAPTER 16 OF NFPA 1 UNIFORM FIRE CODE.
44. ALL BUILDINGS, INCLUDING FOUNDATION WALLS AND FOOTINGS AND BASEMENT SLABS INDICATED ON THE DEMOLITION PLAN ARE TO BE REMOVED FROM THE SITE. CONTRACTOR SHALL SECURE ANY PERMITS, PAY ALL FEES AND PERFORM CLEARING AND GRUBBING AND DEBRIS REMOVAL PRIOR TO COMMENCEMENT OF GRADING OPERATIONS.
45. SEDIMENT AND EROSION CONTROLS AS SHOWN ON THE SEDIMENT AND EROSION CONTROL PLAN AND/OR DEMOLITION PLAN SHALL BE INSTALLED BY THE DEMOLITION CONTRACTOR PRIOR TO START OF DEMOLITION AND CLEARING AND GRUBBING OPERATIONS.
46. REMOVE AND DISPOSE OF ANY SIDEWALKS, FENCES, STAIRS, WALLS, DEBRIS AND RUBBISH REQUIRING REMOVAL FROM THE WORK AREA IN AN APPROVED OFF SITE LANDFILL, BY AN APPROVED HAULER. HAULER SHALL COMPLY WITH ALL REGULATORY REQUIREMENTS.
47. THE CONTRACTOR SHALL SECURE ALL PERMITS FOR HIS DEMOLITION AND DISPOSAL OF HIS DEMOLITION MATERIAL TO BE REMOVED FROM THE SITE. THE CONTRACTOR SHALL POST BONDS AND PAY PERMIT FEES AS REQUIRED. BUILDING DEMOLITION CONTRACTOR SHALL BE RESPONSIBLE FOR PERMITS AND DISPOSAL OF ALL BUILDING DEMOLITION DEBRIS IN AN APPROVED OFF-SITE LANDFILL.
48. ASBESTOS OR HAZARDOUS MATERIAL, IF FOUND ON SITE, SHALL BE REMOVED BY A LICENSED HAZARDOUS MATERIAL ABATEMENT CONTRACTOR.
49. THE CONTRACTOR SHALL PREPARE ALL MANIFEST DOCUMENTS AS REQUIRED PRIOR TO COMMENCEMENT OF DEMOLITION.
50. THE CONTRACTOR SHALL CUT AND PLUG, OR ARRANGE FOR THE APPROPRIATE UTILITY PROVIDER TO CUT AND PLUG ALL SERVICE PIPING AT THE STREET LINE OR AT THE MAIN, AS REQUIRED BY THE UTILITY PROVIDER, OR AS OTHERWISE NOTED OR SHOWN ON THE CONTRACT DRAWINGS. ALL SERVICES MAY NOT BE SHOWN ON THIS PLAN. THE CONTRACTOR SHALL INVESTIGATE THE SITE PRIOR TO BIDDING TO DETERMINE THE EXTENT OF SERVICE PIPING TO BE REMOVED, CUT OR PLUGGED. THE CONTRACTOR SHALL PAY ALL UTILITY PROVIDER FEES FOR ABANDONMENTS AND REMOVALS.
51. THE CONTRACTOR SHALL PROTECT ALL IRON PINS, MONUMENTS AND PROPERTY CORNERS DURING DEMOLITION AND CONSTRUCTION ACTIVITIES. ANY CONTRACTOR DISTURBED PINS, MONUMENTS, AND OR PROPERTY CORNERS, ETC. SHALL BE RESET BY A LICENSED LAND SURVEYOR AT THE EXPENSE OF THE CONTRACTOR.
52. THE DEMOLITION CONTRACTOR SHALL STABILIZE THE SITE AND KEEP EROSION CONTROL MEASURES IN PLACE UNTIL THE COMPLETION OF HIS WORK OR UNTIL THE COMMENCEMENT OF WORK BY THE SITE CONTRACTOR, WHICHEVER OCCURS FIRST, AS REQUIRED OR DEEMED NECESSARY BY THE ENGINEER OR OWNER'S REPRESENTATIVE. THE SITE CONTRACTOR SHALL ASSUME RESPONSIBILITY FOR THE MAINTENANCE OF EXISTING EROSION AND SEDIMENTATION CONTROLS AND FOR INSTALLATION OF ANY NEW SEDIMENT AND EROSION CONTROLS AS PER THE SEDIMENT AND EROSION CONTROL PLAN, AT THAT TIME.
53. THE CONTRACTOR SHALL PUMP OUT BUILDING FUEL AND WASTE OIL TANKS (IF ANY ARE ENCOUNTERED) AND REMOVE FUEL TO AN APPROVED DISPOSAL AREA BY A LICENSED WASTE OIL HANDLING CONTRACTOR IN STRICT ACCORDANCE WITH STATE REQUIREMENTS.
54. IF IMPACTED OR CONTAMINATED SOIL IS ENCOUNTERED BY THE CONTRACTOR, THE CONTRACTOR SHALL SUSPEND EXCAVATION WORK OF IMPACTED SOIL AND NOTIFY THE OWNER AND/OR OWNER'S ENVIRONMENTAL CONSULTANT PRIOR TO PROCEEDING WITH FURTHER WORK IN THE IMPACTED SOIL LOCATION UNTIL FURTHER INSTRUCTED BY THE OWNER AND/OR OWNER'S ENVIRONMENTAL CONSULTANT.
55. EXISTING WATER SERVICES SHALL BE DISCONNECTED AND CAPPED AT MAIN IN ACCORDANCE WITH THE REQUIREMENTS OF THE WATER UTILITY PROVIDER. REMOVE EXISTING ONSITE WATER PIPING TO BE ABANDONED TO RIGHT OF WAY LINE UNLESS OTHERWISE SHOWN ON DEMOLITION PLANS OR AS REQUIRED BY THE WATER UTILITY PROVIDER TO BE REMOVED TO MAIN.
56. EXISTING SANITARY LATERAL SHALL BE PLUGGED WITH NON-SHRINK GROUT AT CURB LINE OR AT MAIN CONNECTION IN ACCORDANCE WITH THE SANITARY UTILITY PROVIDER REQUIREMENTS. REMOVE EXISTING LATERAL PIPING FROM SITE UNLESS OTHERWISE SHOWN ON DEMOLITION PLANS OR AS REQUIRED BY THE SANITARY UTILITY PROVIDER.
57. DOMESTIC GAS SERVICES SHALL BE CAPPED AND SERVICE LINES PURGED OF RESIDUAL GAS IN ACCORDANCE WITH THE GAS UTILITY PROVIDER REQUIREMENTS. WORK TO BE COORDINATED BY AND PAID FOR BY THE CONTRACTOR. REMOVE EXISTING SERVICE PIPING ON SITE. ANY PROPANE TANKS SHALL BE PURGED OF RESIDUAL GAS BY PROPANE SUPPLIER. CONTRACTOR SHALL COORDINATE THIS WORK AND PAY NECESSARY FEES.
58. THE CONTRACTOR SHALL PROVIDE DISCONNECT NOTIFICATION TO THE MUNICIPALITY ENGINEERING DEPARTMENT, TELECOMMUNICATIONS UTILITY PROVIDER, GAS UTILITY PROVIDER, ELECTRIC UTILITY PROVIDER, SANITARY UTILITY PROVIDER, AND WATER UTILITY PROVIDER AT LEAST THREE WEEKS PRIOR TO BEGINNING DEMOLITION.
59. THE CONTRACTOR IS RESPONSIBLE FOR SECURING A DEMOLITION PERMIT FROM THE TOWN OF EAST GRANBY BUILDING DEPARTMENT AND MUST FURNISH THE REQUIRED APPLICATION MATERIAL AND PAY ALL FEES.
60. BACK FILL DEPRESSIONS, FOUNDATION HOLES AND REMOVED DRIVEWAY AREAS IN LOCATIONS NOT SUBJECT TO FURTHER EXCAVATION WITH SOIL MATERIAL APPROVED BY THE OWNER'S GEOTECHNICAL ENGINEER AND COMPACT, FERTILIZE, SEED AND MULCH DISTURBED AREAS NOT SUBJECT TO FURTHER SITE CONSTRUCTION. DEMOLISHED BUILDING FOUNDATION AREA AND BASEMENT IF PRESENT TO BE BACKFILLED WITH GRAVEL FILL OR MATERIAL SPECIFIED IN THE PROJECT GEOTECHNICAL REPORT IN LIFT THICKNESS SPECIFIED IN THE GEOTECHNICAL REPORT. COMPACT TO 95% MAX. DRY DENSITY PER ASTM D1557 AT MOISTURE CONTENT SPECIFIED IN GEOTECHNICAL REPORT AND EARTHWORK SPECIFICATION. EMPLOY WATERING EQUIPMENT FOR DUST CONTROL.
61. THE CONTRACTOR SHALL REPAIR PAVEMENTS BY INSTALLING TEMPORARY AND PERMANENT PAVEMENTS IN PUBLIC RIGHTS OF WAYS AS REQUIRED BY LOCAL GOVERNING AUTHORITIES AND THE MUNICIPALITY AND PER PERMIT REQUIREMENTS DUE TO DEMOLITION AND PIPE REMOVAL ACTIVITIES.
62. THE CONTRACTOR SHALL CUT AND REMOVE AT LUMINARE AND SIGN LOCATIONS ANY PROTRUDING CONDUITS TO 24" BELOW GRADE. THE CONTRACTOR SHALL REMOVE ALL CABLE AND CONDUCTORS FROM REMAINING LIGHTING AND SIGNING CONDUITS TO BE ABANDONED. ANY REMAINING LIGHTING TO REMAIN IN PLACE SHALL BE RECIRCUITED OR REWIRED AS NECESSARY TO REMAIN IN OPERATION.
63. NO WORK ON THIS SITE SHALL BE INITIATED BY THE CONTRACTOR UNTIL A PRE-CONSTRUCTION MEETING WITH OWNER AND THE CIVIL ENGINEER IS PERFORMED. THE CONTRACTOR SHOULD BE AWARE OF ANY SITE INFORMATION AVAILABLE SUCH AS GEOTECHNICAL AND ENVIRONMENTAL REPORTS. THE CONTRACTOR SHALL HAVE 'CT CALL BEFORE YOU DIG' MARK OUTS OF EXISTING UTILITIES COMPLETED PRIOR TO MEETING.
64. THE CONTRACTOR SHALL ARRANGE FOR AND INSTALL TEMPORARY OR PERMANENT UTILITY CONNECTIONS WHERE INDICATED ON PLAN OR AS REQUIRED. MAINTAIN UTILITY SERVICES TO BUILDINGS OR TO SERVICES TO REMAIN. CONTRACTOR TO COORDINATE WITH UTILITY PROVIDERS FOR INSTALLATION AND PAY UTILITY PROVIDER FEES.
65. THE CONTRACTOR SHALL NOT COMMENCE DEMOLITION OR UTILITY DISCONNECTIONS UNTIL AUTHORIZED TO DO SO BY THE OWNER.
66. THE CONTRACTOR OR DEMOLITION CONTRACTOR SHALL INSTALL TEMPORARY SHEETING OR SHORING AS NECESSARY TO PROTECT EXISTING AND NEW BUILDINGS, STRUCTURES AND UTILITIES DURING CONSTRUCTION AND DEMOLITION. SHEETING OR SHORING SHALL BE DESIGNED BY A PROFESSIONAL ENGINEER, LICENSED IN THIS STATE AND EVIDENCE OF SUCH SUBMITTED TO THE OWNER PRIOR TO INSTALLATION.
67. NO SALVAGE SHALL BE PERMITTED UNLESS PAID TO THE OWNER AS A CREDIT.
68. ANY EXISTING POTABLE WELL AND ANY EXISTING SEPTIC TANKS/ABSORPTION AREAS SHALL BE ABANDONED AND REMOVED PER THE CTDPH AND HEALTH CODE REQUIREMENTS.
69. THE CONTRACTOR SHALL PRESERVE EXISTING VEGETATION WHERE POSSIBLE AND/OR AS NOTED ON DRAWINGS. REFER TO SEDIMENT AND EROSION CONTROL PLAN FOR LIMIT OF DISTURBANCE AND EROSION CONTROL NOTES.
70. TOPSOIL SHALL BE STRIPPED AND STOCKPILED ON SITE FOR USE IN FINAL LANDSCAPING.
71. THE CONTRACTOR SHALL COMPACT FILL IN LIFT THICKNESS PER THE GEOTECHNICAL REPORT UNDER ALL PARKING, BUILDING, DRIVE, AND STRUCTURE AREAS TO 95% OF THE MAXIMUM DRY DENSITY AS DETERMINED BY ASTM D1557 (MODIFIED PROCTOR TEST), OR AS REQUIRED BY THE GEOTECHNICAL ENGINEER.
72. UNDERDRAINS SHALL BE ADDED, IF DETERMINED NECESSARY IN THE FIELD BY THE OWNER/GEOTECHNICAL ENGINEER, AFTER SUBGRADE IS ROUGH GRADED.
73. NORTH ARROW AND BEARINGS REFER TO NAD 83.
74. CLEARING LIMITS SHALL BE PHYSICALLY MARKED IN THE FIELD AND APPROVED BY THE TOWN OF EAST GRANBY AGENT PRIOR TO THE START OF WORK ON THE SITE.
75. PROPER CONSTRUCTION PROCEDURES SHALL BE FOLLOWED ON ALL IMPROVEMENTS WITHIN THIS PARCEL SO AS TO PREVENT THE SILTING OF ANY WATERCOURSE OR WETLANDS IN ACCORDANCE WITH THE REGULATIONS OF THE CT DEEP AND THE 2002 CONNECTICUT GUIDELINES FOR SOIL EROSION AND SEDIMENT CONTROL, LATEST EDITION. IN ADDITION, THE CONTRACTOR SHALL STRICTLY ADHERE TO THE SEDIMENT AND EROSION CONTROL PLAN CONTAINED HEREIN. THE CONTRACTOR SHALL BE RESPONSIBLE TO POST ALL BONDS AS REQUIRED BY THE LOCAL MUNICIPALITIES, OR SOIL CONSERVATION DISTRICT WHICH WOULD GUARANTEE THE PROPER IMPLEMENTATION OF THE PLAN.
76. ALL SITE WORK, MATERIALS OF CONSTRUCTION, AND CONSTRUCTION METHODS FOR EARTHWORK AND STORM DRAINAGE WORK SHALL CONFORM TO THE SPECIFICATIONS AND DETAILS AND APPLICABLE SECTIONS OF THE PROJECT SPECIFICATIONS MANUAL. OTHERWISE THIS WORK SHALL CONFORM TO THE CT DEPARTMENT OF TRANSPORTATION SPECIFICATIONS AND PROJECT GEOTECHNICAL REPORT IF THERE IS NO PROJECT SPECIFICATIONS MANUAL. ALL FILL MATERIAL UNDER STRUCTURES AND PAVED AREAS SHALL BE PER THE ABOVE STATED APPLICABLE SPECIFICATIONS, AND/OR PROJECT GEOTECHNICAL REPORT, AND SHALL BE PLACED IN ACCORDANCE WITH THE APPLICABLE SPECIFICATIONS UNDER THE SUPERVISION OF A QUALIFIED PROFESSIONAL ENGINEER. MATERIAL SHALL BE COMPACTED IN LIFT THICKNESSES PER THE PROJECT GEOTECHNICAL REPORT TO 95% OF THE MAXIMUM DRY DENSITY AS DETERMINED BY ASTM D 1557 AT MOISTURE CONTENT INDICATED IN PROJECT GEOTECHNICAL REPORT.
77. ALL DISTURBANCE INCURRED TO MUNICIPAL AND STATE PROPERTY DUE TO CONSTRUCTION SHALL BE RESTORED TO ITS PREVIOUS CONDITION OR BETTER, TO THE SATISFACTION OF THE MUNICIPALITY AND STATE AS APPLICABLE FOR THE LOCATION OF THE WORK.
78. ALL CONSTRUCTION WITHIN A DOT RIGHT OF WAY SHALL COMPLY WITH ALL DEPARTMENT OF TRANSPORTATION STANDARDS AND SPECIFICATIONS.
79. THE UTILITY PLAN DETAILS SITE INSTALLED PIPES UP TO 5' FROM THE BUILDING FACE. REFER TO DRAWINGS BY ARCHITECT FOR BUILDING CONNECTIONS. SITE CONTRACTOR SHALL SUPPLY AND INSTALL PIPE ADAPTERS AS NECESSARY AT BUILDING CONNECTION POINT OR AT EXISTING UTILITY OR PIPE CONNECTION POINT.
80. THE CONTRACTOR SHALL VISIT THE SITE AND VERIFY THE ELEVATION AND LOCATION OF ALL UTILITIES BY VARIOUS MEANS PRIOR TO BEGINNING ANY EXCAVATION. TEST PITS SHALL BE DUG AT ALL LOCATIONS WHERE PROPOSED SANITARY SEWERS AND WHERE PROPOSED STORM PIPING WILL CROSS EXISTING UTILITIES, AND THE HORIZONTAL AND VERTICAL LOCATIONS OF THE UTILITIES SHALL BE DETERMINED. THE CONTRACTOR SHALL CONTACT THE CIVIL ENGINEER IN THE EVENT OF ANY DISCOVERED OR UNFORESEEN CONFLICTS BETWEEN EXISTING AND PROPOSED SANITARY SEWERS, STORM PIPING AND UTILITIES SO THAT AN APPROPRIATE MODIFICATION MAY BE MADE.
81. UTILITY CONNECTION DESIGN AS REFLECTED ON THE PLAN MAY CHANGE SUBJECT TO UTILITY PROVIDER AND GOVERNING AUTHORITY STAFF REVIEW.
82. THE CONTRACTOR SHALL ENSURE THAT ALL UTILITY PROVIDERS AND GOVERNING AUTHORITY STANDARDS FOR MATERIALS AND CONSTRUCTION METHODS ARE MET. THE CONTRACTOR SHALL PERFORM PROPER COORDINATION WITH THE RESPECTIVE UTILITY PROVIDER.
83. THE CONTRACTOR SHALL ARRANGE FOR AND COORDINATE WITH THE RESPECTIVE UTILITY PROVIDERS FOR SERVICE INSTALLATIONS AND CONNECTIONS. THE CONTRACTOR SHALL COORDINATE WORK TO BE PERFORMED BY THE VARIOUS UTILITY PROVIDERS AND SHALL PAY ALL FEES FOR CONNECTIONS, DISCONNECTIONS, RELOCATIONS, INSPECTIONS, AND DEMOLITION UNLESS OTHERWISE STATED IN THE PROJECT SPECIFICATIONS MANUAL AND/OR GENERAL CONDITIONS OF THE CONTRACT.
84. ALL EXISTING PAVEMENT WHERE UTILITY PIPING IS TO BE INSTALLED SHALL BE SAW CUT. AFTER UTILITY INSTALLATION IS COMPLETED, THE CONTRACTOR SHALL INSTALL TEMPORARY AND/OR PERMANENT PAVEMENT REPAIR AS DETAILED ON THE DRAWINGS OR AS REQUIRED BY THE OWNER HAVING JURISDICTION.
85. ALL PIPES SHALL BE LAID ON STRAIGHT ALIGNMENTS AND EVEN GRADES USING A PIPE LASER OR OTHER ACCURATE METHOD.
86. SANITARY LATERAL SHALL MAINTAIN (10' MIN. HORIZONTAL 1.5' VERTICAL MIN.) SEPARATION DISTANCE FROM WATER LINES, OR ADDITIONAL PROTECTION MEASURES WILL BE REQUIRED WHERE PERMITTED, WHICH SHALL INCLUDE CONCRETE ENCASEMENT OF PIPING UNLESS OTHERWISE DIRECTED BY THE UTILITY PROVIDERS AND CIVIL ENGINEER.
87. RELOCATION OF UTILITY PROVIDER FACILITIES SHALL BE DONE IN ACCORDANCE WITH THE REQUIREMENTS OF THE UTILITY PROVIDER.
88. THE CONTRACTOR SHALL COMPACT THE PIPE BACKFILL IN 8" LIFTS ACCORDING TO THE PIPE BEDDING DETAILS. TRENCH BOTTOM SHALL BE STABLE IN HIGH GROUNDWATER AREAS. A PIPE FOUNDATION SHALL BE USED PER THE TRENCH DETAILS AND IN AREAS OF ROCK EXCAVATION.
89. CONTRACTOR TO PROVIDE STEEL SLEEVES AND ANNULAR SPACE SAND FILL FOR UTILITY PIPE AND CONDUIT CONNECTIONS UNDER FOOTINGS.
90. BUILDING UTILITY PENETRATIONS AND LOCATIONS ARE SHOWN FOR THE CONTRACTOR'S INFORMATION AND SHALL BE VERIFIED WITH THE BUILDING MEP, STRUCTURAL, AND ARCHITECTURAL DRAWINGS AND WITH THE OWNER'S CONSTRUCTION MANAGER.
91. ALL UTILITY CONSTRUCTION IS SUBJECT TO INSPECTION FOR APPROVAL PRIOR TO BACKFILLING, IN ACCORDANCE WITH THE APPROPRIATE UTILITY PROVIDER REQUIREMENTS.
92. A ONE-FOOT MINIMUM VERTICAL CLEARANCE BETWEEN WATER, GAS, ELECTRICAL, AND TELEPHONE LINES AND STORM PIPING SHALL BE PROVIDED. A SIX-INC

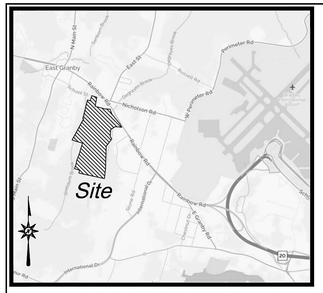

TITLE COMMITMENT INFORMATION

REFERENCE: FIRST AMERICAN TITLE INSURANCE COMPANY Title Number: 562519-XF-CT-CP-PT DATED: 12/20/2020

9. EASEMENT FROM LEONA C. PAINE TO STATE OF CONNECTICUT DATED NOVEMBER 20, 1973 AND RECORDED NOVEMBER 20, 1973 IN VOLUME 54 AT PAGE 1084 OF THE EAST GRANBY LAND RECORDS. (PLOTTED)

10. EASEMENT FROM NEWGATE INTERNATIONAL BUSINESS CENTER LIMITED PARTNERSHIP TO THE CONNECTICUT LIGHT AND POWER COMPANY DATED AUGUST 1, 1985 AND RECORDED AUGUST 27, 1985 IN VOLUME 72 AT PAGE 902 OF THE EAST GRANBY LAND RECORDS. (PLOTTED)

11. SEWER EASEMENT FROM HARTSPRING ASSOCIATES TO THE TOWN OF EAST GRANBY DATED JUNE 26, 1990 AND RECORDED IN VOLUME 89 AT PAGE 477 OF THE EAST GRANBY LAND RECORDS. (PLOTTED)

12. SEWER EASEMENT FROM HARTSPRING ASSOCIATES TO THE TOWN OF EAST GRANBY DATED JUNE 26, 1990 AND RECORDED IN VOLUME 89 AT PAGE 479 OF THE EAST GRANBY LAND RECORDS. (PLOTTED)

13. SEWER EASEMENTS FROM HARTSPRING ASSOCIATES TO THE METROPOLITAN DISTRICT DATED MAY 18, 1990 AND RECORDED IN VOLUME 89 AT PAGE 481 OF THE EAST GRANBY LAND RECORDS. (PLOTTED)

14. WATER MAIN EASEMENT FROM HARTSPRING ASSOCIATES TO THE METROPOLITAN DISTRICT DATED MAY 18, 1990 AND RECORDED IN VOLUME 89 AT PAGE 483 OF THE EAST GRANBY LAND RECORDS. (PLOTTED)

15. WATER MAIN EASEMENT FROM HARTSPRING ASSOCIATES TO THE METROPOLITAN DISTRICT DATED MAY 18, 1990 AND RECORDED IN VOLUME 89 AT PAGE 485 OF THE EAST GRANBY LAND RECORDS. (PLOTTED)

16. WATER MAIN EASEMENT FROM HARTSPRING ASSOCIATES TO THE TOWN OF EAST GRANBY DATED MAY 18, 1990 AND RECORDED IN VOLUME 89 AT PAGE 487 OF THE EAST GRANBY LAND RECORDS. (PLOTTED)

17. ELECTRIC DISTRIBUTION EASEMENT FROM HARTSPRING ASSOCIATES TO THE CONNECTICUT LIGHT AND POWER COMPANY DATED MAY 18, 1990 AND RECORDED IN VOLUME 89 AT PAGE 489 OF THE EAST GRANBY LAND RECORDS. (PLOTTED)

19. RIGHTS OF OTHERS IN AND TO AN EXISTING POND AS SHOWN ON THE MAP REFERRED TO IN SCHEDULE A. (PLOTTED)

20. RIGHTS OF OTHERS IN AND TO SHELDON BROOK, WHICH RUNS ALONG A PORTION OF THE WESTERLY BOUNDARY OF SAID PREMISES. (PLOTTED)

21. TERMS AND CONDITIONS OF A LEASE AS EVIDENCED BY NOTICE LEASE BY AND BETWEEN KESL, LLC (LANDLORD) AND RAINBOW ROAD ASSOCIATES, LLC (TENANT) DATED FEBRUARY 8, 2005 AND RECORDED FEBRUARY 9, 2005 IN VOLUME 155 AT PAGE 575OF THE EAST GRANBY LAND RECORDS. SEE ALSO CORRECTING NOTICE OF LEASE DATED JUNE 2, 2005 AND RECORDED JUNE 9, 2005 IN VOLUME 157 AT PAGE 322 OF THE EAST GRANBY LAND RECORDS. (PLOTTED)

22. TERMS AND CONDITIONS OF NON-EXCLUSIVE RIGHTS AND EASEMENTS RESERVED IN QUIT-CLAIM DEED FROM KESL, LLC TO KESL TWO, LLC, ET AL DATED AUGUST 26, 2011 AND RECORDED IN VOLUME 188 AT PAGE 900 OF THE EAST GRANBY LAND RECORDS. (AFFECTS APPURTENANT RIGHTS – PLOTTED ON 50-58 RAINBOW ROAD)

23. DECLARATION OF RESTRICTIVE COVENANTS BY KESL TWO, LLC, ET AL IN FAVOR OF KESL, LLC DATED AS OF AUGUST 26, 2011 AND RECORDED IN VOLUME 188 AT PAGE 916 OF THE EAST GRANBY LAND RECORDS, AS AFFECTED BY SUBORDINATION AGREEMENT BY AND AMONG KESL, LLC, FIRST NIAGARA BANK, N.A. AND CASTRO PROPERTIES, LLC DATED AUGUST 30, 2011 AND RECORDED IN VOLUME 188 AT PAGE 954 OF SAID LAND RECORDS. (AFFECTS APPURTENANT RIGHTS – NOT PLOTTABLE 50-58 RAINBOW ROAD)

29. EASEMENT MODIFICATION AGREEMENT BY AND BETWEEN CASTO PROPERTIES, LLC, KESL, LLC AND 62 RAINBOW ROAD, LLC,DATED AS OF AUGUST 22, 2018 AND RECORDED IN VOLUME 217 AT PAGE 239 OF THE EAST GRANBY LAND RECORDS. SECOND EASEMENT MODIFICATION AGREEMENT BY AND BETWEEN CASTO PROPERTIES, LLC, KESL, LLC AND 62 RAINBOW ROAD, LLC, DATED AS OF SEPTEMBER 17, 2020 AND RECORDED IN VOLUME 225 AT PAGE 778 OF THE EAST GRANBY LAND RECORDS. (AFFECT APPURTENANT RIGHTS – 50-58 RAINBOW ROAD) ("A" PARKING EASEMENT AREA, "B" DRIVEWAY EASMENT AREA, "C" PROJECT ENTRANCE DRIVEWAY) (PLOTTED)

LEGEND

- Property Line
- Easement Line
- FEMA Flood Zone Line
- Zone AE — FEMA Flood Zone Text
- Land Use Zoning Line
- EH Zone — Land Use Zoning Text
- Edge of Water
- Limit of Wetlands
- Treeline
- 50 — Major Contour
- Minor Contour
- Stone Wall
- Guide Rail
- X — Fence
- E — Underground Electric Line
- G — Gas Line
- S — Sanitary Sewer
- FM — Sanitary Force Main
- T — Underground Telecommunications Line
- W — Water Line
- MH — Manhole

GENERAL NOTES

1. A) THIS MAP HAS BEEN PREPARED IN ACCORDANCE WITH THE REGULATIONS OF CONNECTICUT STATE AGENCIES, SECTIONS 20-300b-1 THROUGH 20-300b-20 AND THE "STANDARDS FOR SURVEYS AND MAPS IN THE STATE OF CONNECTICUT" AS ADOPTED BY THE CONNECTICUT ASSOCIATION OF LAND SURVEYORS, INC. ON SEPTEMBER 26, 1996.
   B) THIS PLAN CONFORMS TO HORIZONTAL ACCURACY CLASS A-2.
   C) BOUNDARY DETERMINATION IS BASED UPON A RESURVEY.
   D) THE TYPE OF SURVEY PERFORMED IS A PROPERTY SURVEY AND IS INTENDED TO DEPICT THE EXISTING CONDITIONS WITH RESPECT TO MONUMENTATION FOUND, STRUCTURES, EASEMENTS, ENCROACHMENTS, VISIBLE UTILITIES AND ROADWAYS.
2. NORTH ARROW AND BEARINGS REFER TO NAD 83 AND ARE BASED ON GPS OBSERVATIONS BY BL COMPANIES JANUARY 2018.
3. PARCEL IS LOCATED IN A FLOOD HAZARD AREA "AE", BASE FLOOD ELEVATIONS DETERMINE AND FLOOD ZONE "X" AREAS DETERMINED TO BE OUTSIDE 0.2% ANNUAL CHANCE FLOODPLAIN AS DEPICTED ON F.I.R.M. COMMUNITY PANEL NO.'S: 09003C0204 PANEL 204; 09003C0203 PANEL 203; 09003C0211 PANEL 211; 09003C0212 PANEL 212; OF 675 EFFECTIVE DATE: SEPTEMBER 26, 2008.
4. THE UNDERGROUND UTILITIES DEPICTED HAVE BEEN PLOTTED FROM FIELD SURVEY INFORMATION AND EXISTING DRAWINGS. THE SURVEYOR MAKES NO GUARANTEES THAT THE UNDERGROUND UTILITIES DEPICTED COMPRISE ALL SUCH UTILITIES IN THE AREA, EITHER IN SERVICE OR ABANDONED. THE SURVEYOR FURTHER DOES NOT WARRANT THAT THE UNDERGROUND UTILITIES DEPICTED ARE IN THE EXACT LOCATION INDICATED THOUGH THEY ARE PLOTTED AS ACCURATELY AS POSSIBLE FROM INFORMATION AVAILABLE. THE SURVEYOR HAS NOT PHYSICALLY EXPOSED THE UNDERGROUND UTILITIES. PER CONNECTICUT STATE LAW THE CONTRACTOR SHALL CONFIRM THE LOCATION OF ALL UTILITIES PRIOR TO THE COMMENCEMENT OF EXCAVATION. CALL BEFORE YOU DIG 1-800-922-4455.
5. FEATURES DEPICTED HEREON ARE FROM AN AERIAL SURVEY BY GOLDEN AERIAL SURVEYS, INC. FLOWN APRIL 2016.
6. WETLANDS LINES DEPICTED IN HALF-TONE HEREON WERE FLAGGED AND LOCATED BY DAWSON ENVIRONMENTAL 1/24/2018 THROUGH 2/6/2018. (ORIGINAL WETLAND DELINEATION)
7. WETLANDS LINES DEPICTED HEREON WERE FLAGGED BY JMM WETLAND CONSULTING SERVICES, LLC ON 3/19/2025 AND FIELD LOCATED BY BL COMPANIES ON 4/28/2025. (UPDATED WETLAND DELINEATION)
8. THE SURVEYOR DID NOT OBSERVE ANY VISIBLE ENCROACHMENTS ALONG THE PERIMETER OF THE SURVEY PARCEL DURING THE SURVEY UPDATE ON 4-29-2025.

LOCATION MAP

NOT TO SCALE

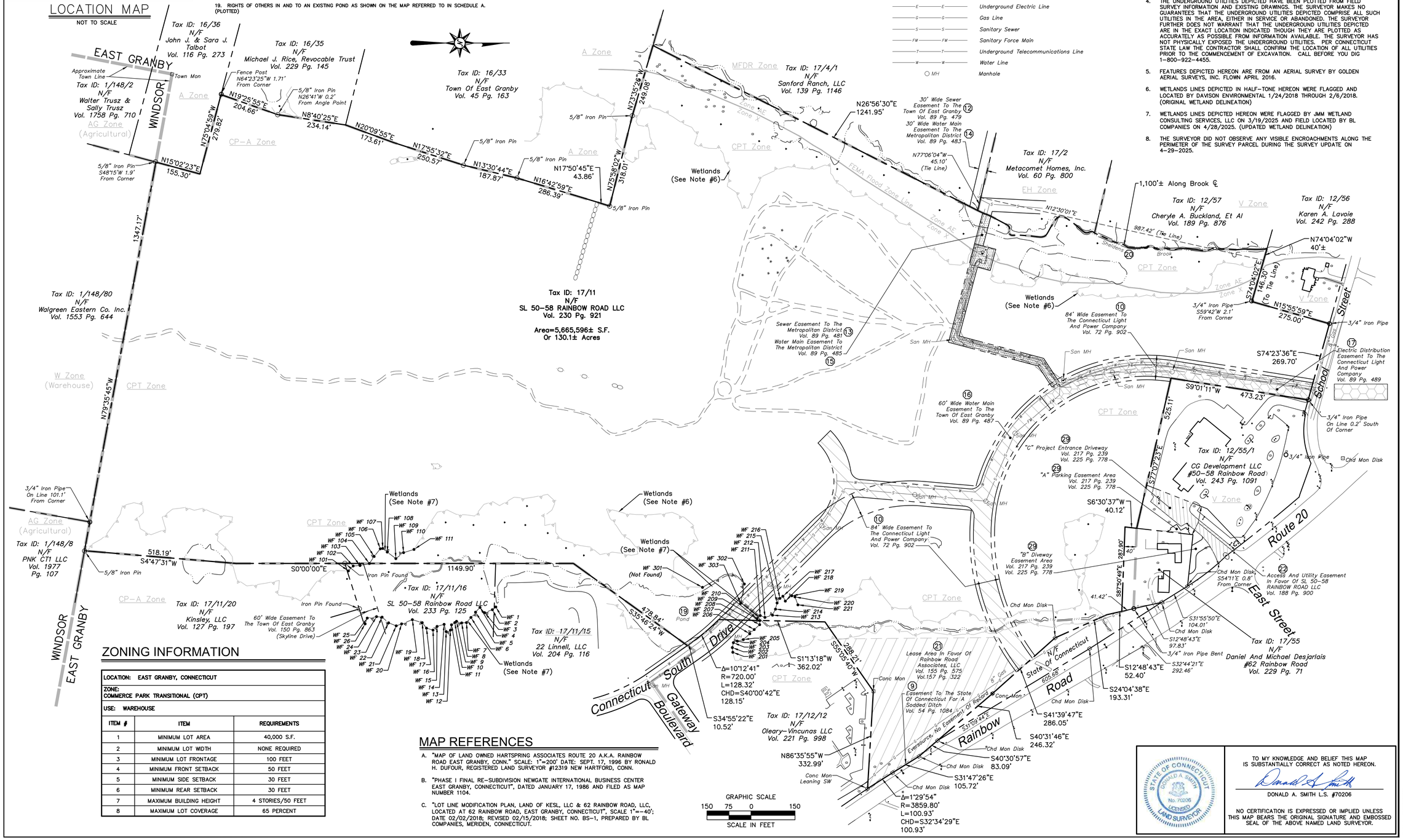

ZONING INFORMATION

LOCATION: EAST GRANBY, CONNECTICUT	
ZONE: COMMERCE PARK TRANSITIONAL (CPT)	
USE: WAREHOUSE	
ITEM #	**ITEM** / **REQUIREMENTS**
1	MINIMUM LOT AREA — 40,000 S.F.
2	MINIMUM LOT WIDTH — NONE REQUIRED
3	MINIMUM LOT FRONTAGE — 100 FEET
4	MINIMUM FRONT SETBACK — 50 FEET
5	MINIMUM SIDE SETBACK — 30 FEET
6	MINIMUM REAR SETBACK — 30 FEET
7	MAXIMUM BUILDING HEIGHT — 4 STORIES/50 FEET
8	MAXIMUM LOT COVERAGE — 65 PERCENT

MAP REFERENCES

A. "MAP OF LAND OWNED HARTSPRING ASSOCIATES ROUTE 20 A.K.A. RAINBOW ROAD EAST GRANBY, CONN." SCALE: 1"=200' DATE: SEPT. 17, 1996 BY RONALD H. DUFOUR, REGISTERED LAND SURVEYOR #12319 NEW HARTFORD, CONN.

B. "PHASE I FINAL RE-SUBDIVISION NEWGATE INTERNATIONAL BUSINESS CENTER EAST GRANBY, CONNECTICUT", DATED JANUARY 17, 1986 AND FILED AS MAP NUMBER 1104.

C. "LOT LINE MODIFICATION PLAN, LAND OF KESL, LLC & 62 RAINBOW ROAD, LLC, LOCATED AT 62 RAINBOW ROAD, EAST GRANBY, CONNECTICUT", SCALE 1"=40'; DATE 02/02/2018; REVISED 02/15/2018; SHEET NO. BS-1, PREPARED BY BL COMPANIES, MERIDEN, CONNECTICUT.

GRAPHIC SCALE
150 75 0 150
SCALE IN FEET

STATE OF CONNECTICUT — DONALD A. SMITH — No. 70206 — LICENSED LAND SURVEYOR

TO MY KNOWLEDGE AND BELIEF THIS MAP IS SUBSTANTIALLY CORRECT AS NOTED HEREON.

DONALD A. SMITH L.S. #70206

NO CERTIFICATION IS EXPRESSED OR IMPLIED UNLESS THIS MAP BEARS THE ORIGINAL SIGNATURE AND EMBOSSED SEAL OF THE ABOVE NAMED LAND SURVEYOR.

Architecture
Engineering
Environmental
Land Surveying

BL Companies

355 Research Parkway
Meriden, CT 06450
(203) 630-1406
(203) 630-2615 Fax

LAND OF
SL 50-58 RAINBOW ROAD LLC
RAINBOW ROAD
EAST GRANBY, CONNECTICUT

REVISIONS

No.	Date	Desc.
1	05-16-2025	Updated per Soil Scientist Comment

Surveyed S.S./L.J./J.H.
Drawn J.S.
Reviewed J.M.
Scale 1"=150'
Project No. 17C6461
Date 07/26/2021
Field Book 517
CAD File: BS200203701

Title
BOUNDARY SURVEY

Sheet No. 1 of 1

BS-1

Xref dp - XY200203701

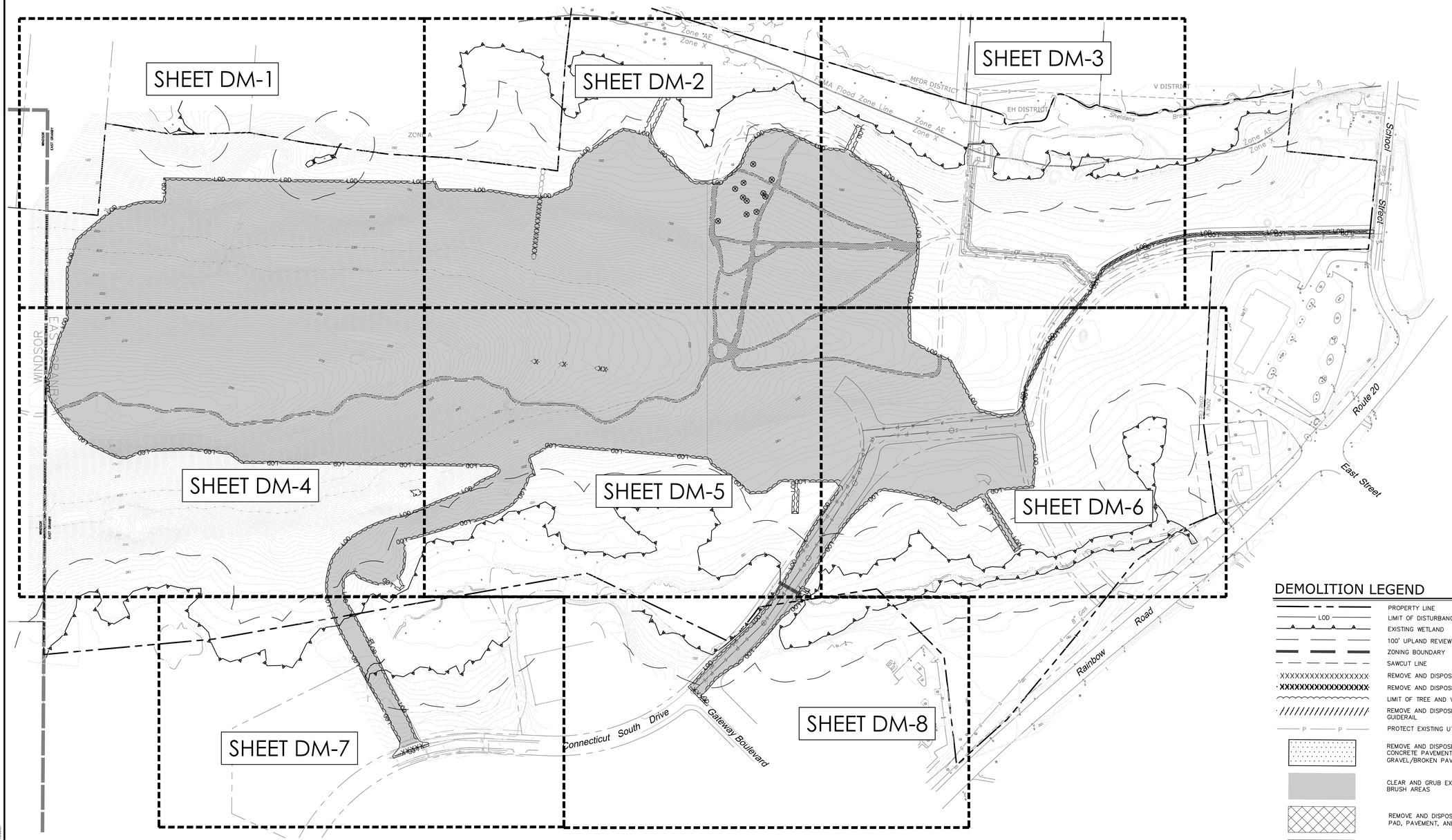

DEMOLITION LEGEND

- PROPERTY LINE
- LOD — LIMIT OF DISTURBANCE/CONTRACT LIMIT LINE
- EXISTING WETLAND
- 100' UPLAND REVIEW AREA
- ZONING BOUNDARY
- SAWCUT LINE
- REMOVE AND DISPOSE OF CURB, WALL, ETC.
- REMOVE AND DISPOSE OF EXISTING UTILITY LINE
- LIMIT OF TREE AND VEGETATION CLEARING
- REMOVE AND DISPOSE OF FENCING OR GUIDERAIL
- P — P — PROTECT EXISTING UTILITY LINE
- REMOVE AND DISPOSE OF EXISTING BITUMINOUS CONCRETE PAVEMENT STRUCTURE AND OR GRAVEL/BROKEN PAVEMENT
- CLEAR AND GRUB EXISTING WOODED AND BRUSH AREAS
- REMOVE AND DISPOSE OF EXISTING CONCRETE PAD, PAVEMENT, AND/OR WALK
- REMOVE AND DISPOSE OF EXISTING BUILDING, FOUNDATION, AND ASSOCIATED APPURTENANCES
- REMOVE AND DISPOSE OF EXISTING TREE, SHRUB AND/OR STUMP AND ROOTBALL
- S — PROTECT EXISTING TREE/SHRUB TO REMAIN

FOR PERMITTING PURPOSES ONLY
NOT RELEASED FOR CONSTRUCTION

GRAPHIC SCALE
150 75 0 150
SCALE IN FEET

Architecture
Engineering
Environmental
Land Surveying

BL Companies

100 Constitution Plaza
10th Floor
Hartford, CT 06103
(860) 249-2200

STATE OF CONNECTION
TIMOTHY A. HOYT
31117
LICENSED
PROFESSIONAL ENGINEER

PROPOSED MANUFACTURING / INDUSTRIAL DEVELOPMENT

50-58 RAINBOW ROAD
EAST GRANBY, CONNECTICUT 06026

REVISIONS

No.	Date	Desc.

Designed	P.G.M.
Drawn	P.G.M.
Reviewed	T.A.H.
Scale	1"=150'
Project No.	2300888
Date	06/03/2025
CAD File: DM230088801	

Title

OVERALL DEMOLITION PLAN

Sheet No.

DM-0

Xref (s) : BI2300888801 ; XZ300888801 ; XC230088801 ; XC230088804

K:\2023\23-PMAITREE-01\CIVIL\DWG\BI\2300888801\DWG\DM\2300888801 DWG DM-0 2 PAGE 150SC

© 2025 BL COMPANIES, INC. THESE DRAWINGS SHALL NOT BE UTILIZED BY ANY PERSON, FIRM OR CORPORATION WITHOUT THE SPECIFIC WRITTEN PERMISSION OF BL COMPANIES.

DEMOLITION LEGEND

- PROPERTY LINE
- LOD — LIMIT OF DISTURBANCE/CONTRACT LIMIT LINE
- EXISTING WETLAND
- 100' UPLAND REVIEW AREA
- ZONING BOUNDARY
- SAWCUT LINE
- XXXXXXXXXXXXXXXXX — REMOVE AND DISPOSE OF CURB, WALL, ETC.
- XXXXXXXXXXXXXXXXX — REMOVE AND DISPOSE OF EXISTING UTILITY LINE
- LIMIT OF TREE AND VEGETATION CLEARING
- REMOVE AND DISPOSE OF FENCING OR GUIDERAIL
- P — P — PROTECT EXISTING UTILITY LINE
- REMOVE AND DISPOSE OF EXISTING BITUMINOUS CONCRETE PAVEMENT STRUCTURE AND OR GRAVEL/BROKEN PAVEMENT
- CLEAR AND GRUB EXISTING WOODED AND BRUSH AREAS
- REMOVE AND DISPOSE OF EXISTING CONCRETE PAD, PAVEMENT, AND/OR WALK
- REMOVE AND DISPOSE OF EXISTING BUILDING, FOUNDATION, AND ASSOCIATED APPURTENANCES
- REMOVE AND DISPOSE OF EXISTING TREE, SHRUB AND/OR STUMP AND ROOTBALL
- S — PROTECT EXISTING TREE/SHRUB TO REMAIN

REFERENCE LINE – SEE SHEET DM–2

WINDSOR

EAST GRANBY

APPROXIMATE TOWN LINE

PROPERTY LINE

EXISTING WETLAND LIMITS (TYP.)

100' UPLAND REVIEW AREA

EXISTING WETLAND LIMITS (TYP.)

100' UPLAND REVIEW AREA

ZONE A

CLEAR AND GRUB EXISTING VEGETATION. REMOVE ALL DEBRIS, STUMPS, AND ROOTBALLS (TYP.)

PROPOSED LIMIT OF DISTURBANCE (TYP.)

LOD

180 190 200 210 220 230 240 250

REFERENCE LINE – SEE SHEET DM–4

FOR PERMITTING PURPOSES ONLY
NOT RELEASED FOR CONSTRUCTION

GRAPHIC SCALE
40 20 0 40
SCALE IN FEET

© 2025 BL COMPANIES, INC. THESE DRAWINGS SHALL NOT BE UTILIZED BY ANY PERSON, FIRM OR CORPORATION WITHOUT THE SPECIFIC WRITTEN PERMISSION OF BL COMPANIES.

Architecture
Engineering
Environmental
Land Surveying

BL Companies

100 Constitution Plaza
10th Floor
Hartford, CT 06103
(860) 249-2200

STATE OF CONNECTION — TIMOTHY A. HOYT — 28119 — LICENSED PROFESSIONAL ENGINEER

PROPOSED MANUFACTURING / INDUSTRIAL DEVELOPMENT

50-58 RAINBOW ROAD
EAST GRANBY, CONNECTICUT 06026

REVISIONS
No. Date Desc.

Designed	P.G.M.
Drawn	P.G.M.
Reviewed	T.A.H.
Scale	1"=40'
Project No.	2300888
Date	06/03/2025
CAD File: DM230088801	

Title

DEMOLITION PLAN

Sheet No.

DM-1

Xref (s) : B023008880I ; XZ23008880I ; XC23008880I ; XC23008880G

I:\2023\3 PM\ATHNEL - EL\DWG\SUB\2300888\DWG\DM230888I.DWG, DM230888I, DWG.DM 2 24X36 40SC

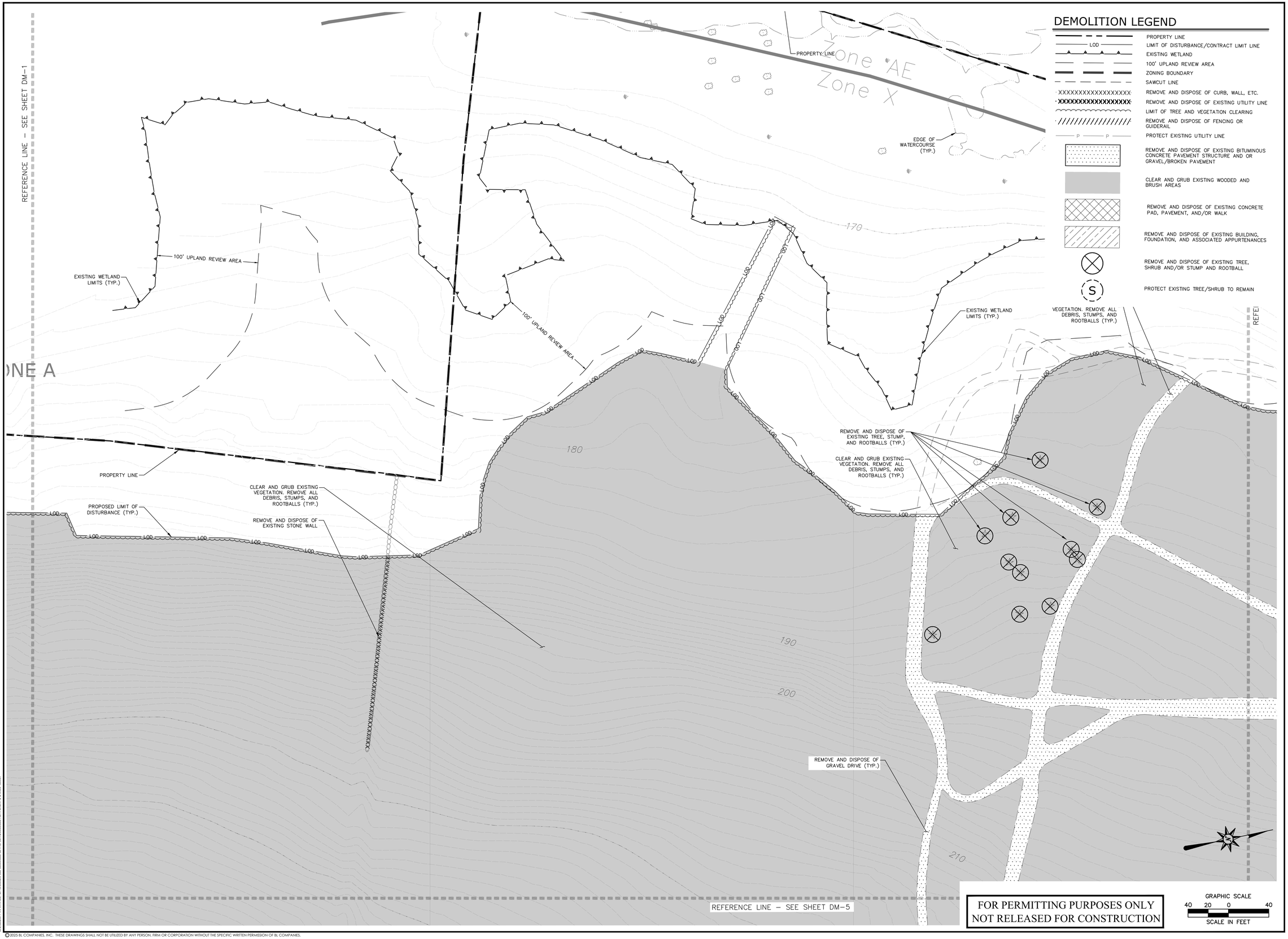

© 2025 BL COMPANIES, INC. THESE DRAWINGS SHALL NOT BE UTILIZED BY ANY PERSON, FIRM OR CORPORATION WITHOUT THE SPECIFIC WRITTEN PERMISSION OF BL COMPANIES.

Architecture
Engineering
Environmental
Land Surveying
BL Companies
100 Constitution Plaza
10th Floor
Hartford, CT 06103
(860) 249-2200

STATE OF CONNECTION
TIMOTHY A. HOLLY
29119
LICENSED
PROFESSIONAL ENGINEER

PROPOSED MANUFACTURING / INDUSTRIAL DEVELOPMENT

50-58 RAINBOW ROAD
EAST GRANBY, CONNECTICUT 06026

REVISIONS
No. Date Desc.

Designed	M.A.G
Drawn	M.A.G
Reviewed	INITIALS
Scale	1"=40'
Project No.	2300888
Date	06/03/2025
CAD File: DM230088801	

Title
DEMOLITION PLAN

Sheet No.
DM-2

Xref (s) : BD230088801 | XC230088801 | XC230088804

6/3/2025, PM MATTHEW.G.VOBIS:\230088\DWG\DM230088801.DWG Dm-2 24X36 ARCH

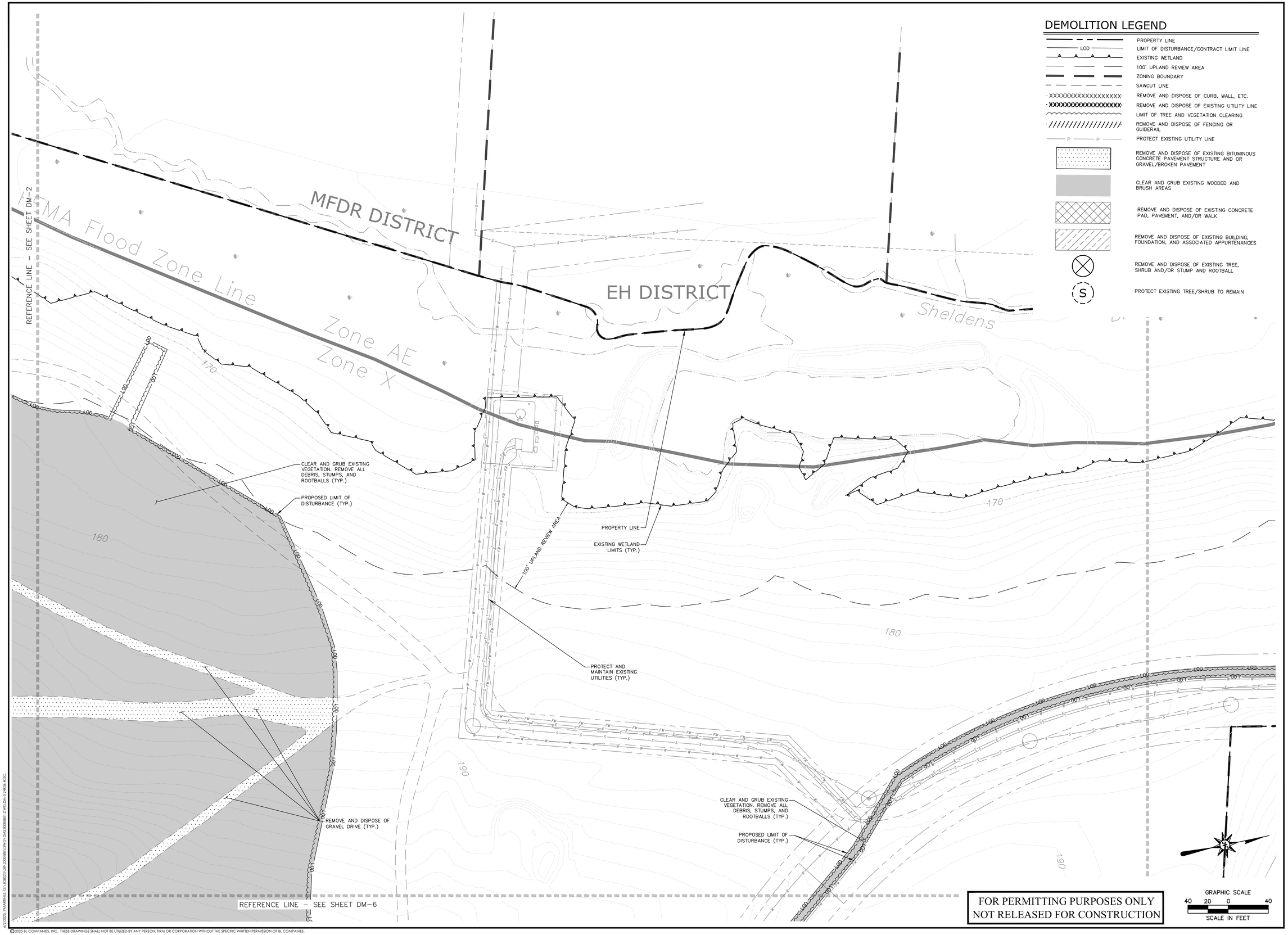

FOR PERMITTING PURPOSES ONLY
NOT RELEASED FOR CONSTRUCTION

Architecture
Engineering
Environmental
Land Surveying
BL Companies
100 Constitution Plaza
10th Floor
Hartford, CT 06103
(860) 249-2200

STATE OF CONNECTICUT
TIMOTHY A. HOULE
38117
LICENSED
PROFESSIONAL ENGINEER

PROPOSED MANUFACTURING / INDUSTRIAL DEVELOPMENT

50-58 RAINBOW ROAD
EAST GRANBY, CONNECTICUT 06026

REVISIONS

No.	Date	Desc.

Designed	P.G.M.
Drawn	P.G.M.
Reviewed	T.A.H.
Scale	1"=40'
Project No.	2300888
Date	06/03/2025
CAD File:	DM230088801

Title

DEMOLITION PLAN

Sheet No.

DM-3

Xref (s): : BD230088801 : XC230088801 : XC230088801 : XC230088806

© 2025 BL COMPANIES, INC. THESE DRAWINGS SHALL NOT BE UTILIZED BY ANY PERSON, FIRM OR CORPORATION WITHOUT THE SPECIFIC WRITTEN PERMISSION OF BL COMPANIES.

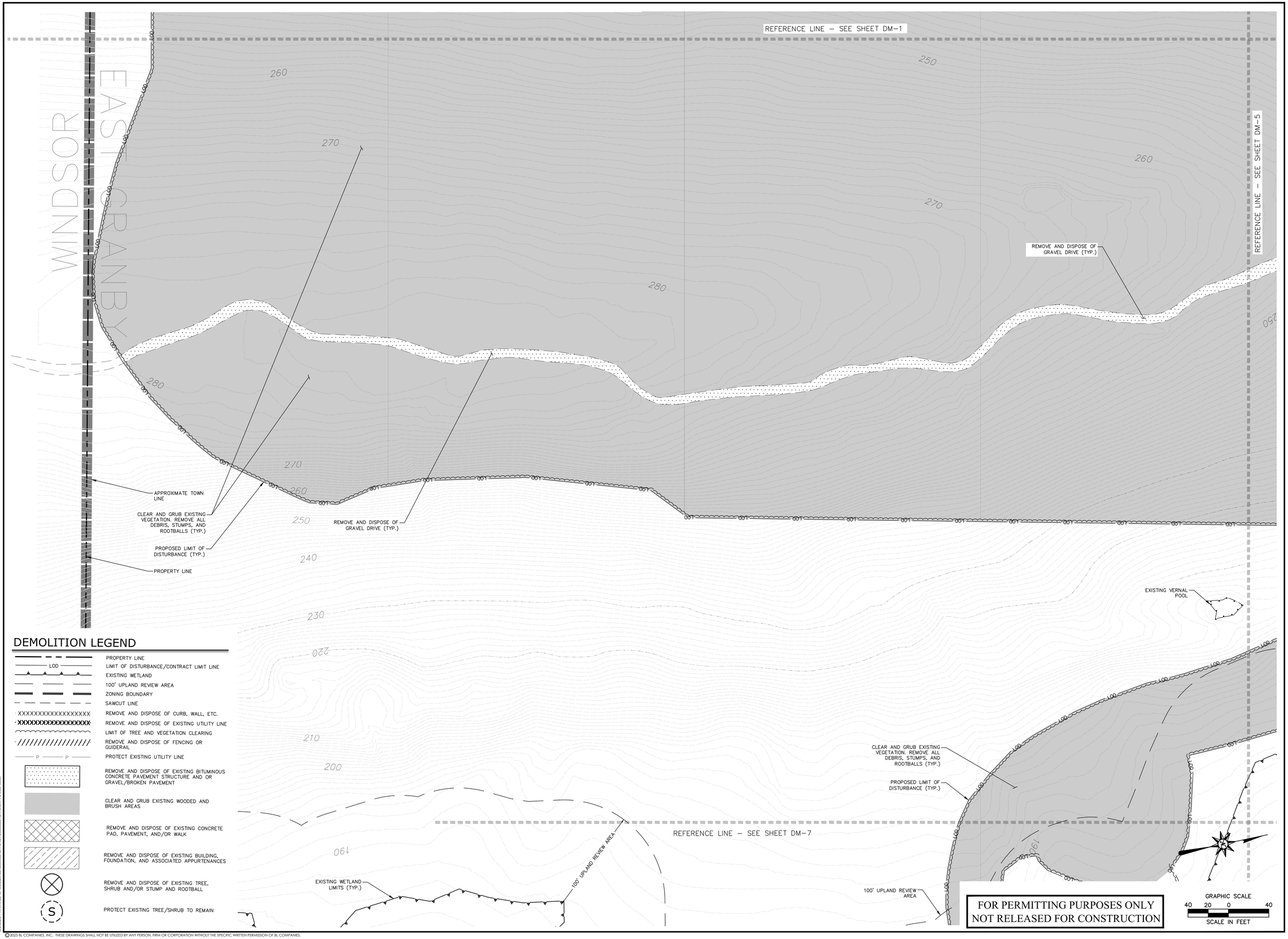

DEMOLITION LEGEND

- PROPERTY LINE
- LOD — LIMIT OF DISTURBANCE/CONTRACT LIMIT LINE
- EXISTING WETLAND
- 100' UPLAND REVIEW AREA
- ZONING BOUNDARY
- SAWCUT LINE
- XXXXXXXXXXXXXXXXX — REMOVE AND DISPOSE OF CURB, WALL, ETC.
- XXXXXXXXXXXXXXXXX — REMOVE AND DISPOSE OF EXISTING UTILITY LINE
- LIMIT OF TREE AND VEGETATION CLEARING
- REMOVE AND DISPOSE OF FENCING OR GUIDERAIL
- P — P — PROTECT EXISTING UTILITY LINE
- REMOVE AND DISPOSE OF EXISTING BITUMINOUS CONCRETE PAVEMENT STRUCTURE AND OR GRAVEL/BROKEN PAVEMENT
- CLEAR AND GRUB EXISTING WOODED AND BRUSH AREAS
- REMOVE AND DISPOSE OF EXISTING CONCRETE PAD, PAVEMENT, AND/OR WALK
- REMOVE AND DISPOSE OF EXISTING BUILDING, FOUNDATION, AND ASSOCIATED APPURTENANCES
- REMOVE AND DISPOSE OF EXISTING TREE, SHRUB AND/OR STUMP AND ROOTBALL
- S — PROTECT EXISTING TREE/SHRUB TO REMAIN

FOR PERMITTING PURPOSES ONLY
NOT RELEASED FOR CONSTRUCTION

GRAPHIC SCALE
40 20 0 40
SCALE IN FEET

© 2025 BL COMPANIES, INC. THESE DRAWINGS SHALL NOT BE UTILIZED BY ANY PERSON, FIRM OR CORPORATION WITHOUT THE SPECIFIC WRITTEN PERMISSION OF BL COMPANIES.

Architecture
Engineering
Environmental
Land Surveying

BL Companies

100 Constitution Plaza
10th Floor
Hartford, CT 06103
(860) 249-2200

STATE OF CONNECTICUT
TIMOTHY A. HOLL
31117
LICENSED
PROFESSIONAL ENGINEER

PROPOSED MANUFACTURING / INDUSTRIAL DEVELOPMENT

50-58 RAINBOW ROAD
EAST GRANBY, CONNECTICUT 06026

REVISIONS
No. Date Desc.

Designed	P.G.M.
Drawn	P.G.M.
Reviewed	T.A.H.
Scale	1"=40'
Project No.	2300888
Date	06/03/2025
CAD File: DM230088801	

Title

DEMOLITION PLAN

Sheet No.

DM-4

Xref (s) : B2300888801 ; X2300888801 ; XC2300888801 ; XC2300888804

\\PZSRVFILE FS\PROJFILE\ G\ WORKSTATION\ 2300888\ DWG\ DM\ 2300888801.DWG Dm 4 PAGN #ISC

REFERENCE LINE – SEE SHEET DM-2

REFERENCE LINE – SEE SHEET DM-4

REMOVE AND DISPOSE OF EXISTING STONE WALL

REMOVE AND DISPOSE OF GRAVEL DRIVE (TYP.)

PROPOSED LIMIT OF DISTURBANCE (TYP.)

CLEAR AND GRUB EXISTING VEGETATION. REMOVE ALL DEBRIS, STUMPS, AND ROOTBALLS (TYP.)

REMOVE AND DISPOSE OF GRAVEL DRIVE (TYP.)

100' UPLAND REVIEW AREA

EXISTING WETLAND LIMITS (TYP.)

REFERENCE LINE – SEE SHEET DM-6

REFERENCE LINE – SEE SHEET DM-7

REFERENCE LINE – SEE SHEET DM-8

PROPERTY LINE

ALL EXISTING UTILITIES TO REMAIN AND BE PROTECTED

EXISTING CULVERT TO REMAIN AND BE PROTECTED

DEMOLITION LEGEND

- PROPERTY LINE
- LOD — LIMIT OF DISTURBANCE/CONTRACT LIMIT LINE
- EXISTING WETLAND
- 100' UPLAND REVIEW AREA
- ZONING BOUNDARY
- SAWCUT LINE
- XXXXXXXXXXXXXXXXX — REMOVE AND DISPOSE OF CURB, WALL, ETC.
- XXXXXXXXXXXXXXXXX — REMOVE AND DISPOSE OF EXISTING UTILITY LINE
- LIMIT OF TREE AND VEGETATION CLEARING
- REMOVE AND DISPOSE OF FENCING OR GUIDERAIL
- P — P — PROTECT EXISTING UTILITY LINE
- REMOVE AND DISPOSE OF EXISTING BITUMINOUS CONCRETE PAVEMENT STRUCTURE AND OR GRAVEL/BROKEN PAVEMENT
- CLEAR AND GRUB EXISTING WOODED AND BRUSH AREAS
- REMOVE AND DISPOSE OF EXISTING CONCRETE PAD, PAVEMENT, AND/OR WALK
- REMOVE AND DISPOSE OF EXISTING BUILDING, FOUNDATION, AND ASSOCIATED APPURTENANCES
- REMOVE AND DISPOSE OF EXISTING TREE, SHRUB AND/OR STUMP AND ROOTBALL
- S — PROTECT EXISTING TREE/SHRUB TO REMAIN

FOR PERMITTING PURPOSES ONLY
NOT RELEASED FOR CONSTRUCTION

GRAPHIC SCALE
40 20 0 40
SCALE IN FEET

© 2025 BL COMPANIES, INC. THESE DRAWINGS SHALL NOT BE UTILIZED BY ANY PERSON, FIRM OR CORPORATION WITHOUT THE SPECIFIC WRITTEN PERMISSION OF BL COMPANIES.

Architecture
Engineering
Environmental
Land Surveying

BL Companies

100 Constitution Plaza
10th Floor
Hartford, CT 06103
(860) 249-2200

STATE OF CONNECTION
TIMOTHY A. HOLL
31119
LICENSED
PROFESSIONAL ENGINEER

PROPOSED MANUFACTURING / INDUSTRIAL DEVELOPMENT

50-58 RAINBOW ROAD
EAST GRANBY, CONNECTICUT 06026

REVISIONS
No. Date Desc.

Designed	P.G.M.
Drawn	P.G.M.
Reviewed	T.A.H.
Scale	1"=40'
Project No.	2300888
Date	06/03/2025
CAD File: DM230088801	

Title

DEMOLITION PLAN

Sheet No.

DM-5

Xref (s) : BD230088801 | X230088801 | XC230088801 | XC230088804

J:\2023\2300888\CAD\DWG\DRAWINGS\2300888 DWG\DM230088801.DWG Dm-5 PAEZA 40SC

REFERENCE LINE – SEE SHEET DM-3

PROPOSED LIMIT OF DISTURBANCE (TYP.)

CLEAR AND GRUB EXISTING VEGETATION. REMOVE ALL DEBRIS, STUMPS, AND ROOTBALLS (TYP.)

PROPOSED LIMIT OF DISTURBANCE (TYP.)

REMOVE AND DISPOSE OF GRAVEL DRIVE (TYP.)

PROTECT AND MAINTAIN EXISTING WATERLINE

PROTECT AND MAINTAIN EXISTING SANITARY SEWER LINE

REFERENCE LINE – SEE SHEET DM-5

CLEAR AND GRUB EXISTING VEGETATION. REMOVE ALL DEBRIS, STUMPS, AND ROOTBALLS (TYP.)

REFERENCE LINE – SEE SHEET DM-8

PROPERTY LINE

EXISTING WETLAND LIMITS (TYP.)

100' UPLAND REVIEW AREA

ZONE V
ZONE CPT

DEMOLITION LEGEND

- PROPERTY LINE
- LOD — LIMIT OF DISTURBANCE/CONTRACT LIMIT LINE
- EXISTING WETLAND
- 100' UPLAND REVIEW AREA
- ZONING BOUNDARY
- SAWCUT LINE
- XXXXXXXXXXXXXXXXX — REMOVE AND DISPOSE OF CURB, WALL, ETC.
- XXXXXXXXXXXXXXXXX — REMOVE AND DISPOSE OF EXISTING UTILITY LINE
- LIMIT OF TREE AND VEGETATION CLEARING
- REMOVE AND DISPOSE OF FENCING OR GUIDERAIL
- P — P — PROTECT EXISTING UTILITY LINE
- REMOVE AND DISPOSE OF EXISTING BITUMINOUS CONCRETE PAVEMENT STRUCTURE AND OR GRAVEL/BROKEN PAVEMENT
- CLEAR AND GRUB EXISTING WOODED AND BRUSH AREAS
- REMOVE AND DISPOSE OF EXISTING CONCRETE PAD, PAVEMENT, AND/OR WALK
- REMOVE AND DISPOSE OF EXISTING BUILDING, FOUNDATION, AND ASSOCIATED APPURTENANCES
- REMOVE AND DISPOSE OF EXISTING TREE, SHRUB AND/OR STUMP AND ROOTBALL
- S — PROTECT EXISTING TREE/SHRUB TO REMAIN

FOR PERMITTING PURPOSES ONLY
NOT RELEASED FOR CONSTRUCTION

GRAPHIC SCALE
40 20 0 40
SCALE IN FEET

© 2025 BL COMPANIES, INC. THESE DRAWINGS SHALL NOT BE UTILIZED BY ANY PERSON, FIRM OR CORPORATION WITHOUT THE SPECIFIC WRITTEN PERMISSION OF BL COMPANIES.

Architecture
Engineering
Environmental
Land Surveying

BL Companies

100 Constitution Plaza
10th Floor
Hartford, CT 06103
(860) 249-2200

STATE OF CONNECTION
TIMOTHY A. HOLL
31117
LICENSED
PROFESSIONAL ENGINEER

PROPOSED MANUFACTURING / INDUSTRIAL DEVELOPMENT

50-58 RAINBOW ROAD
EAST GRANBY, CONNECTICUT 06026

REVISIONS
No. Date Desc.

Designed	P.G.M.
Drawn	P.G.M.
Reviewed	T.A.H.
Scale	1"=40'
Project No.	2300888
Date	06/03/2025
CAD File: DM230088801	

Title

DEMOLITION PLAN

Sheet No.

DM-6

Xref (s) : BD230088801 ; XZ230088801 ; XC230088801 ; XC230088804

G:\2023\2300888\PLANSHEET\DWG\DESIGN\2300888_DM01.DWG 24x36 ARCH E

REFERENCE LINE – SEE SHEET DM–4

REFERENCE LINE – SEE SHEET DM–5

REFERENCE LINE – SEE SHEET DM–8

CLEAR AND GRUB EXISTING VEGETATION, REMOVE ALL DEBRIS, STUMPS, AND ROOTBALLS (TYP.)

PROPOSED LIMIT OF DISTURBANCE (TYP.)

100' UPLAND REVIEW AREA

EXISTING WETLAND LIMITS (TYP.)

PROPERTY LINE

PRESERVE AND PROTECT EXISTING MONUMENT

EXISTING WATER SERVICE LINE VALVES, AND ALL APPURTENANCES TO REMAIN AND BE PROTECTED

PROPOSED SAWCUT LINE (TYP.)

SAWCUT, REMOVE AND DISPOSE OF CONCRETE CURB AS NECESSARY FOR PROPOSED DRIVEWAY

SAWCUT, REMOVE AND DISPOSE OF BITUMINOUS CONCRETE PAVEMENT AS NECESSARY FOR PROPOSED DRIVEWAY

EXISTING SEWER MAIN AND MANHOLE COVER TO REMAIN AND BE PROTECTED

DEMOLITION LEGEND

	PROPERTY LINE
LOD	LIMIT OF DISTURBANCE/CONTRACT LIMIT LINE
	EXISTING WETLAND
	100' UPLAND REVIEW AREA
	ZONING BOUNDARY
	SAWCUT LINE
XXXXXXXXXXXXXXXXXX	REMOVE AND DISPOSE OF CURB, WALL, ETC.
XXXXXXXXXXXXXXXXXX	REMOVE AND DISPOSE OF EXISTING UTILITY LINE
	LIMIT OF TREE AND VEGETATION CLEARING
	REMOVE AND DISPOSE OF FENCING OR GUIDERAIL
P P	PROTECT EXISTING UTILITY LINE
	REMOVE AND DISPOSE OF EXISTING BITUMINOUS CONCRETE PAVEMENT STRUCTURE AND OR GRAVEL/BROKEN PAVEMENT
	CLEAR AND GRUB EXISTING WOODED AND BRUSH AREAS
	REMOVE AND DISPOSE OF EXISTING CONCRETE PAD, PAVEMENT, AND/OR WALK
	REMOVE AND DISPOSE OF EXISTING BUILDING, FOUNDATION, AND ASSOCIATED APPURTENANCES
	REMOVE AND DISPOSE OF EXISTING TREE, SHRUB AND/OR STUMP AND ROOTBALL
S	PROTECT EXISTING TREE/SHRUB TO REMAIN

FOR PERMITTING PURPOSES ONLY
NOT RELEASED FOR CONSTRUCTION

GRAPHIC SCALE
40 20 0 40
SCALE IN FEET

© 2025 BL COMPANIES, INC. THESE DRAWINGS SHALL NOT BE UTILIZED BY ANY PERSON, FIRM OR CORPORATION WITHOUT THE SPECIFIC WRITTEN PERMISSION OF BL COMPANIES.

Architecture
Engineering
Environmental
Land Surveying

BL Companies

100 Constitution Plaza
10th Floor
Hartford, CT 06103
(860) 249-2200

STATE OF CONNECTION
TIMOTHY A. HOYT
21117
LICENSED
PROFESSIONAL ENGINEER

PROPOSED MANUFACTURING / INDUSTRIAL DEVELOPMENT

50-58 RAINBOW ROAD
EAST GRANBY, CONNECTICUT 06026

REVISIONS
No. Date Desc.

Designed	P.G.M.
Drawn	P.G.M.
Reviewed	T.A.H.
Scale	SCALE
Project No.	2300888
Date	06/03/2025
CAD File:	DM230088801

Title

DEMOLITION PLAN

Sheet No.

DM-7

Xref (s): BD230088801 | XZ230088801 | XC230088804 | XC230088801

J:\2023\23-0888\CAD\230088801.DWG\230088801.DWG Dec 7, 2024 - 4:51pm

EXISTING WETLAND LIMITS (TYP.)

REFERENCE LINE – SEE SHEET DM-5

REFERENCE LINE – SEE SHEET DM-6

REFERENCE LINE – SEE SHEET DM-7

PROPERTY LINE

ALL EXISTING UTILITIES TO REMAIN AND BE PROTECTED

EXISTING CULVERT TO REMAIN AND BE PROTECTED

CLEAR AND GRUB EXISTING VEGETATION, REMOVE ALL DEBRIS, STUMPS, AND ROOTBALLS (TYP.)

PROTECT AND MAINTAIN EXISTING WATER LINE

PROTECT AND MAINTAIN EXISTING SANITARY SEWER LINE

100' UPLAND REVIEW AREA

CLEAR AND GRUB EXISTING VEGETATION, REMOVE ALL DEBRIS, STUMPS, AND ROOTBALLS (TYP.)

PROPOSED LIMIT OF DISTURBANCE (TYP.)

SAWCUT, REMOVE AND DISPOSE OF CONCRETE CURB

PROPOSED SAWCUT LINE (TYP.)

Gateway Boulevard

DEMOLITION LEGEND

- PROPERTY LINE
- LOD — LIMIT OF DISTURBANCE/CONTRACT LIMIT LINE
- EXISTING WETLAND
- 100' UPLAND REVIEW AREA
- ZONING BOUNDARY
- SAWCUT LINE
- XXXXXXXXXXXXXXXXXX — REMOVE AND DISPOSE OF CURB, WALL, ETC.
- XXXXXXXXXXXXXXXXXX — REMOVE AND DISPOSE OF EXISTING UTILITY LINE
- LIMIT OF TREE AND VEGETATION CLEARING
- REMOVE AND DISPOSE OF FENCING OR GUIDERAIL
- P — P — PROTECT EXISTING UTILITY LINE
- REMOVE AND DISPOSE OF EXISTING BITUMINOUS CONCRETE PAVEMENT STRUCTURE AND OR GRAVEL/BROKEN PAVEMENT
- CLEAR AND GRUB EXISTING WOODED AND BRUSH AREAS
- REMOVE AND DISPOSE OF EXISTING CONCRETE PAD, PAVEMENT, AND/OR WALK
- REMOVE AND DISPOSE OF EXISTING BUILDING, FOUNDATION, AND ASSOCIATED APPURTENANCES
- REMOVE AND DISPOSE OF EXISTING TREE, SHRUB AND/OR STUMP AND ROOTBALL
- (S) — PROTECT EXISTING TREE/SHRUB TO REMAIN

FOR PERMITTING PURPOSES ONLY
NOT RELEASED FOR CONSTRUCTION

GRAPHIC SCALE
40 20 0 40
SCALE IN FEET

Architecture
Engineering
Environmental
Land Surveying

BL Companies

100 Constitution Plaza
10th Floor
Hartford, CT 06103
(860) 249-2200

STATE OF CONNECTION
TIMOTHY A. HOLL
21117
LICENSED
PROFESSIONAL ENGINEER

PROPOSED MANUFACTURING / INDUSTRIAL DEVELOPMENT

50-58 RAINBOW ROAD
EAST GRANBY, CONNECTICUT 06026

REVISIONS
No. Date Desc.

Designed	P.G.M.
Drawn	P.G.M.
Reviewed	T.A.H.
Scale	SCALE
Project No.	2300888
Date	06/03/2025
CAD File: DM230088801	

Title

DEMOLITION PLAN

Sheet No.

DM-8

Xref (s): - B0230088801 | XZ230088801 | XC230088804

J:\2023\2300888\CAD\CIVIL\DM\230088801.DWG DM230088801 DWG Dec 8, 2025 8:45:45 AM
© 2025 BL COMPANIES, INC. THESE DRAWINGS SHALL NOT BE UTILIZED BY ANY PERSON, FIRM OR CORPORATION WITHOUT THE SPECIFIC WRITTEN PERMISSION OF BL COMPANIES.

ZONING INFORMATION

LOCATION: EAST GRANBY, CONNECTICUT				
ZONE: CPT (COMMERCE PARK TRANSITION)				
USE: WAREHOUSE (PERMITTED)				
ITEM #	ITEM	CPT	PROPOSED	VARIANCE
1	MINIMUM LOT AREA	80,000 S.F.	±5,676,838.2 S.F. (±130.3 AC.)	NO
2	MINIMUM LOT WIDTH	NONE REQUIRED	269.7 FEET	NO
3	MINIMUM LOT FRONTAGE	100 FEET	1,517.8 FEET	NO
4	MINIMUM FRONT SETBACK	50 FEET	±647.5 FEET	NO
5	MINIMUM SIDE SETBACK	30 FEET	±262.7 FEET	NO
6	MINIMUM REAR SETBACK	30 FEET	±216.1 FEET	NO
7	MAXIMUM BUILDING HEIGHT	45 FEET/ 3.5 STORIES	3 STORIES	NO
8	MAXIMUM LOT COVERAGE	60 PERCENT	±28.3 PERCENT	NO

PARKING INFORMATION

ITEM #	ITEM	REQUIREMENTS	PROPOSED	VARIANCE
1	BUILDING FOOTPRINT SIZE	NONE REQUIRED	400,000 S.F., 300,000 S.F. (TOTAL = 700,000 S.F.)	NO
2	PARKING REQUIRED	WAREHOUSE: 0.5 SPACES PER 1,000 S.F. (700,000 S.F. / 1,000 * 0.5 = 350 SPACES) TOTAL REQUIRED = 350 SPACES	542 SPACES	NO
3	MINIMUM EV SPACES	10% OF TOTAL SPACES = 55	56 SPACES	NO
4	MINIMUM HANDICAPPED PARKING SPACES REQUIRED	BLDG A = 7 BLDG B = 8	BLDG A = 8 BLDG B = 8	NO
5	MINIMUM PARKING DIMENSIONS	9 FEET X 18 FEET	9 FEET X 18 FEET	NO
6	MINIMUM AISLE WIDTH	24 FEET – 2-WAY	24 FEET – 2-WAY	NO
7	MINIMUM FRONT SETBACK	25 FEET	±442.1 FEET	NO
8	MINIMUM SIDE SETBACK	10 FEET	±141.6 FEET	NO
9	MINIMUM REAR SETBACK	10 FEET	±95.1 FEET	NO

SITE PLAN LEGEND

- PROPERTY LINE
- LOD — LIMIT OF DISTURBANCE/CONTRACT LIMIT LINE
- EXISTING WETLAND
- 100' UPLAND REVIEW AREA
- SAWCUT LINE
- PROVIDE AND INSTALL CONCRETE CURB
- x — x — x — PROVIDE AND INSTALL 6' HIGH CHAIN LINK FENCE
- PROVIDE AND INSTALL MODULAR BLOCK RETAINING WALL
- PROVIDE AND INSTALL CONCRETE SIDEWALK
- PROVIDE AND INSTALL HEAVY DUTY CONCRETE STRUCTURE
- PROVIDE AND INSTALL STANDARD DUTY BITUMINOUS CONCRETE PAVEMENT STRUCTURE
- PROVIDE AND INSTALL FULL DEPTH HEAVY DUTY BITUMINOUS CONCRETE PAVEMENT STRUCTURE
- PROVIDE AND INSTALL TRAFFIC SIGN
- A / # — PROPOSED PARKING COUNT

SIGN LEGEND

SIGN NO.	CT-DOT NO. OR MUTCD NO.	LEGEND
A	31-0532	STOP 30"
B	31-0629	VAN ACCESSIBLE
C	31-0648	VAN ACCESSIBLE
D	31-0282	
E	R5-2	
F	–	
G	–	
H	31-0222	

NOTE: HANDICAPPED SIGNS TO BE INSTALLED IN PIPE BOLLARDS (SEE DETAIL). ALL HANDICAP SIGNAGE TO CONFORM TO LATEST BUILDING CODE. SHEET ALUMINUM SIGN BLANKS SHALL BE CONSTRUCTED OF SHEET ALUMINUM ALLOY 6061-T6 OR ALLOY 5052-H38. SHEET ALUMINUM SIGN BLANKS SHALL CONFORM TO ASTM B209.

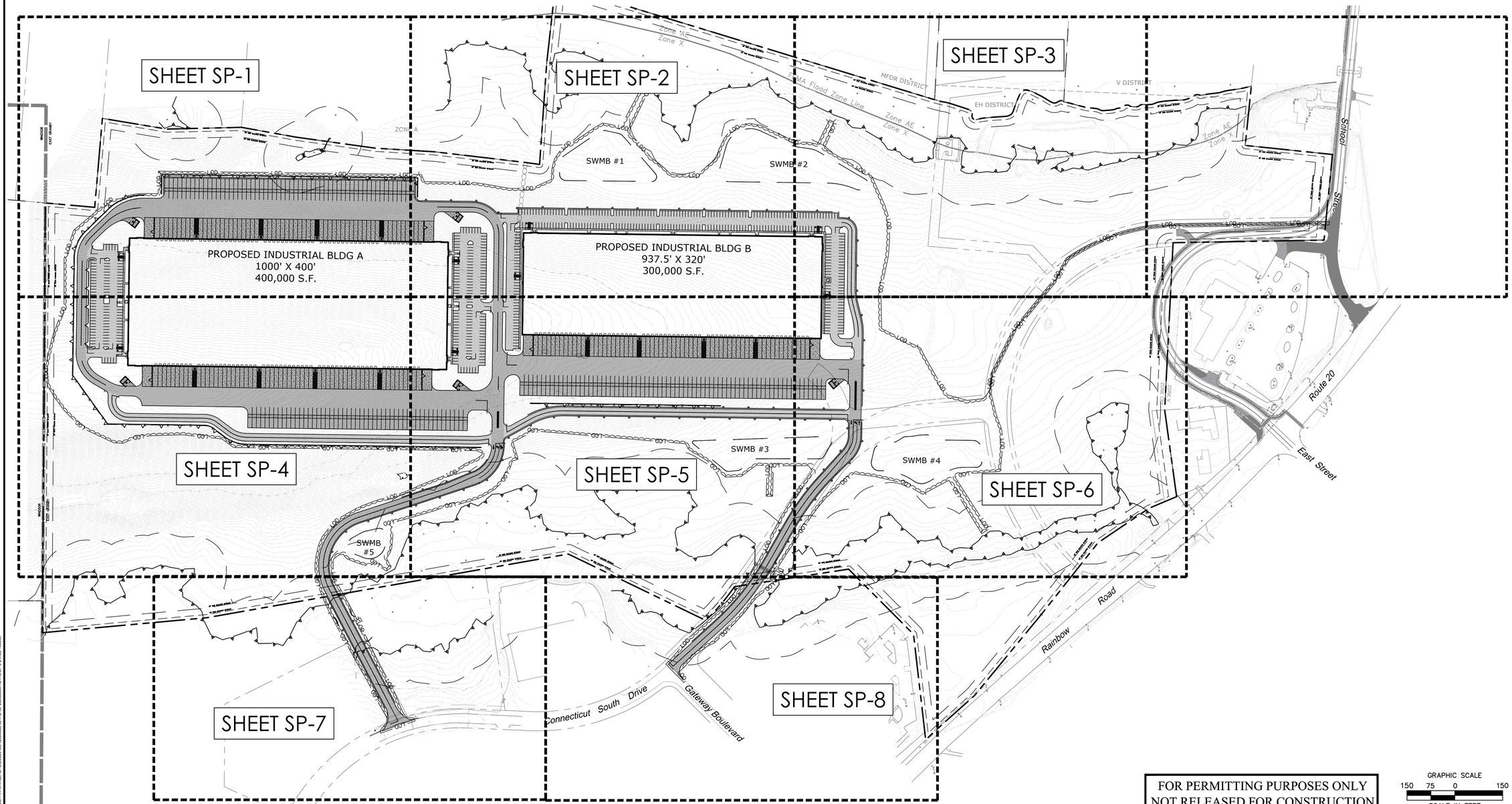

FOR PERMITTING PURPOSES ONLY
NOT RELEASED FOR CONSTRUCTION

GRAPHIC SCALE
150 75 0 150
SCALE IN FEET

© 2025 BL COMPANIES, INC. THESE DRAWINGS SHALL NOT BE UTILIZED BY ANY PERSON, FIRM OR CORPORATION WITHOUT THE SPECIFIC WRITTEN PERMISSION OF BL COMPANIES.

Architecture
Engineering
Environmental
Land Surveying
BL Companies
100 Constitution Plaza
10th Floor
Hartford, CT 06103
(860) 249-2200

STATE OF CONNECTICUT
TIMOTHY A. VOLZ
21117
LICENSED
PROFESSIONAL ENGINEER

PROPOSED MANUFACTURING / INDUSTRIAL DEVELOPMENT

50-58 RAINBOW ROAD
EAST GRANBY, CONNECTICUT 06026

REVISIONS		
No.	Date	Desc.

Designed	P.G.M.
Drawn	P.G.M.
Reviewed	T.A.H.
Scale	1"=150'
Project No.	2300888
Date	06/03/2025
CAD File: SP230088801	

Title
OVERALL SITE PLAN

Sheet No.
SP-0

Xref (s): - BD230088801 - XZ230088801 - XC230088801 - 2024-2832 HWY - (5)18-10 Preliminary

LT/2025, THAMTINEZ, G:\CIVIL\23\SP\2300888\DWG\SP230088801.DWG,SP-0 24X36 ISSUE,

SITE PLAN LEGEND

- PROPERTY LINE
- LOD — LIMIT OF DISTURBANCE/CONTRACT LIMIT LINE
- EXISTING WETLAND
- 100' UPLAND REVIEW AREA
- SAWCUT LINE
- PROVIDE AND INSTALL CONCRETE CURB
- x — x — x — PROVIDE AND INSTALL 6' HIGH CHAIN LINK FENCE
- PROVIDE AND INSTALL MODULAR BLOCK RETAINING WALL
- PROVIDE AND INSTALL CONCRETE SIDEWALK
- PROVIDE AND INSTALL HEAVY DUTY CONCRETE STRUCTURE
- PROVIDE AND INSTALL STANDARD DUTY BITUMINOUS CONCRETE PAVEMENT STRUCTURE
- PROVIDE AND INSTALL FULL DEPTH HEAVY DUTY BITUMINOUS CONCRETE PAVEMENT STRUCTURE
- PROVIDE AND INSTALL TRAFFIC SIGN
- PROPOSED PARKING COUNT

SIGN LEGEND

SIGN NO.	CT-DOT NO. OR MUTCD NO.	LEGEND
A	31-0532	STOP 30"
B	31-0629	
C	31-0648	VAN ACCESSIBLE
D	31-0282	
E	R5-2	
F	–	
G	–	
H	31-0222	

NOTE: HANDICAPPED SIGNS TO BE INSTALLED IN PIPE BOLLARDS (SEE DETAIL). ALL HANDICAP SIGNAGE TO CONFORM TO LATEST BUILDING CODE. SHEET ALUMINUM SIGN BLANKS SHALL BE CONSTRUCTED OF SHEET ALUMINUM ALLOY 6061-T6 OR ALLOY 5052-H38. SHEET ALUMINUM SIGN BLANKS SHALL CONFORM TO ASTM B209.

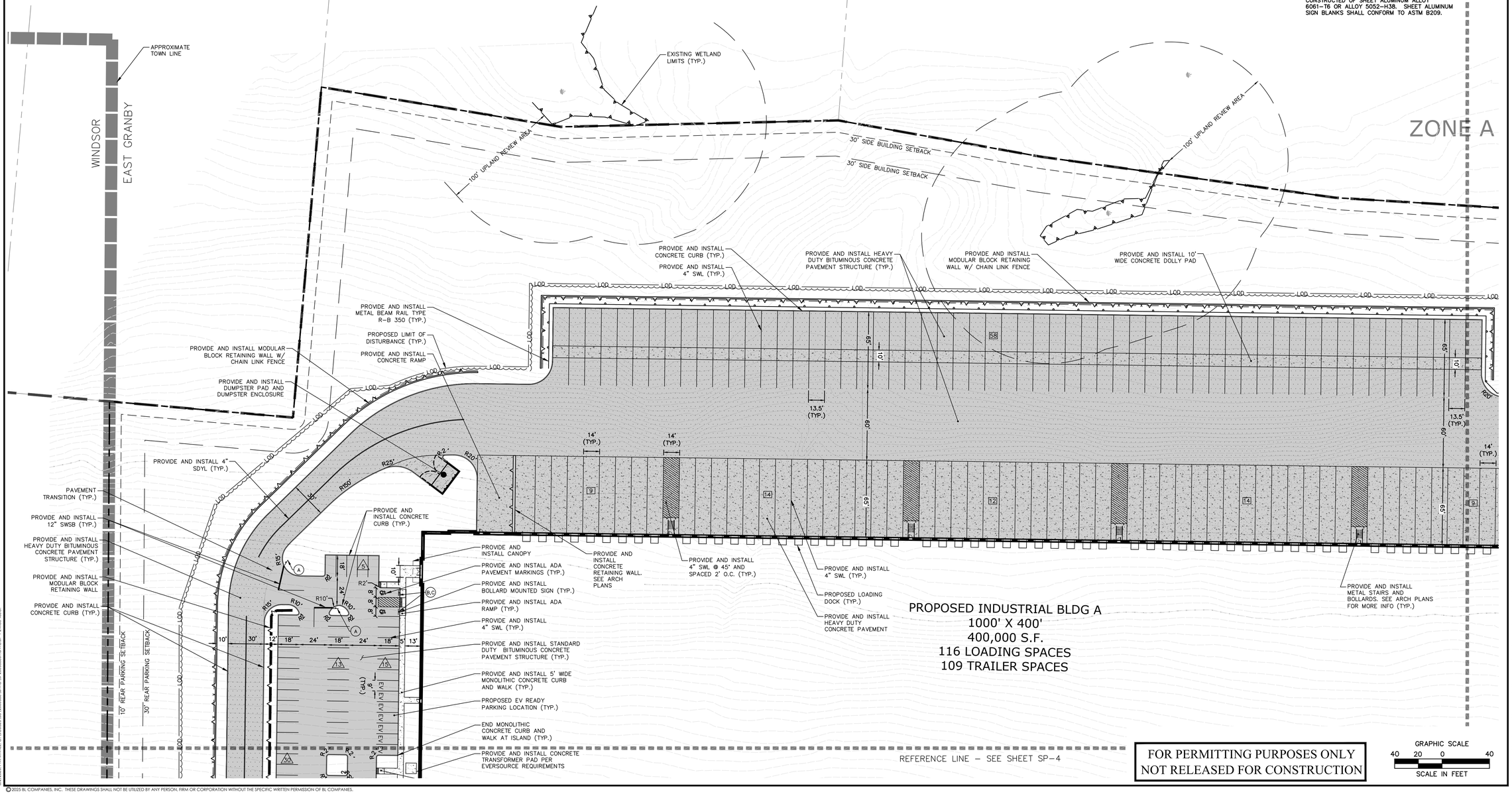

PROPOSED INDUSTRIAL BLDG A
1000' X 400'
400,000 S.F.
116 LOADING SPACES
109 TRAILER SPACES

REFERENCE LINE - SEE SHEET SP-4

FOR PERMITTING PURPOSES ONLY
NOT RELEASED FOR CONSTRUCTION

GRAPHIC SCALE
40 20 0 40
SCALE IN FEET

© 2025 BL COMPANIES, INC. THESE DRAWINGS SHALL NOT BE UTILIZED BY ANY PERSON, FIRM OR CORPORATION WITHOUT THE SPECIFIC WRITTEN PERMISSION OF BL COMPANIES.

Architecture
Engineering
Environmental
Land Surveying

BL Companies

100 Constitution Plaza
10th Floor
Hartford, CT 06103
(860) 249-2200

STATE OF CONNECTICUT
TIMOTHY A. VOLL
28119
LICENSED
PROFESSIONAL ENGINEER

PROPOSED MANUFACTURING / INDUSTRIAL DEVELOPMENT

50-58 RAINBOW ROAD
EAST GRANBY, CONNECTICUT 06026

REVISIONS		
No.	Date	Desc.

Designed	P.G.M.
Drawn	P.G.M.
Reviewed	T.A.H.
Scale	1"=40'
Project No.	2300888
Date	06/03/2025
CAD File: SP230088801	

Title

SITE PLAN

Sheet No.

SP-1

Xref (s) : B2300888801 ; X2300888801 ; XC2300888801 ; 2024-2832-HWY ; 0518-101 Preliminary

G:\2023\3 PM\4TREE\ G:\CIVIL\DESIGN\ 2300888 \DWG\ SP2300888801.DWG SP-1 24X36 ARCH C

SITE PLAN LEGEND

- PROPERTY LINE
- LOD — LIMIT OF DISTURBANCE/CONTRACT LIMIT LINE
- EXISTING WETLAND
- 100' UPLAND REVIEW AREA
- SAWCUT LINE
- PROVIDE AND INSTALL CONCRETE CURB
- x — x — x — PROVIDE AND INSTALL 6' HIGH CHAIN LINK FENCE
- PROVIDE AND INSTALL MODULAR BLOCK RETAINING WALL
- PROVIDE AND INSTALL CONCRETE SIDEWALK
- PROVIDE AND INSTALL HEAVY DUTY CONCRETE STRUCTURE
- PROVIDE AND INSTALL STANDARD DUTY BITUMINOUS CONCRETE PAVEMENT STRUCTURE
- PROVIDE AND INSTALL FULL DEPTH HEAVY DUTY BITUMINOUS CONCRETE PAVEMENT STRUCTURE
- A # — PROVIDE AND INSTALL TRAFFIC SIGN
- PROPOSED PARKING COUNT

SIGN LEGEND

SIGN NO.	CT-DOT NO. OR MUTCD NO.	LEGEND
A	31-0532	STOP 30"
B	31-0629	RESERVED PARKING FOR PERSONS WITH DISABILITIES AS DEFINED BY LAW $250 FINE
C	31-0648	VAN ACCESSIBLE
D	31-0282	
E	R5-2	
F	–	
G	–	
H	31-0222	

NOTE: HANDICAPPED SIGNS TO BE INSTALLED IN PIPE BOLLARDS (SEE DETAIL). ALL HANDICAP SIGNAGE TO CONFORM TO LATEST BUILDING CODE. SHEET ALUMINUM SIGN BLANKS SHALL BE CONSTRUCTED OF SHEET ALUMINUM ALLOY 6061-T6 OR ALLOY 5052-H38. SHEET ALUMINUM SIGN BLANKS SHALL CONFORM TO ASTM B209.

REFERENCE LINE – SEE SHEET SP-1

REFERENCE LINE – SEE SHEET SP-3

Zone A

Zone X

EXISTING WETLAND LIMITS (TYP.)

100' UPLAND REVIEW AREA

30' SIDE BUILDING SETBACK

30' SIDE BUILDING SETBACK

SWMB #1

SWMB #2

PROVIDE AND INSTALL 4" SDYL (TYP.)

PROVIDE AND INSTALL DUMPSTER PAD AND DUMPSTER ENCLOSURE

PROVIDE AND INSTALL HEAVY DUTY BITUMINOUS CONCRETE PAVEMENT STRUCTURE (TYP.)

PAVEMENT TRANSITION (TYP.)

PROVIDE AND INSTALL 12" SWSB (TYP.)

PROVIDE AND INSTALL ADA PAVEMENT MARKINGS (TYP.)

PROVIDE AND INSTALL 4" SWL (TYP.)

PROVIDE AND INSTALL 5' WIDE MONOLITHIC CONCRETE WALK AND CURB (TYP.)

PROVIDE AND INSTALL METAL BEAM RAIL TYPE R-B 350 (TYP.)

PROVIDE AND INSTALL STANDARD DUTY BITUMINOUS CONCRETE PAVEMENT STRUCTURE (TYP.)

PROVIDE AND INSTALL CONCRETE CURB (TYP.)

PROVIDE AND INSTALL CONCRETE CURB (TYP.)

PROVIDE AND INSTALL CONCRETE RAMP

PROVIDE AND INSTALL CONCRETE RETAINING WALL. SEE ARCH PLANS

PROVIDE AND INSTALL ADA RAMP (TYP.)

PROVIDE AND INSTALL 4" SWL @ 45° AND SPACED 2' O.C. (TYP.)

PROVIDE AND INSTALL CANOPY

PROVIDE AND INSTALL CONCRETE CURB (TYP.)

PROVIDE AND INSTALL CANOPY

PROVIDE AND INSTALL ADA RAMP (TYP.)

PROVIDE AND INSTALL ADA PAVEMENT MARKING (TYP.)

PROPOSED EV READY PARKING LOCATION (TYP.)

PROVIDE AND INSTALL 4" SWL (TYP.)

PROVIDE AND INSTALL 5' WIDE MONOLITHIC CONCRETE CURB AND WALK (TYP.)

PROVIDE AND INSTALL STANDARD DUTY BITUMINOUS CONCRETE PAVEMENT STRUCTURE (TYP.)

PROVIDE AND INSTALL 5' WIDE MONOLITHIC CONCRETE CURB AND WALK (TYP.)

PROVIDE AND INSTALL 4" SWL (TYP.)

PROVIDE AND INSTALL BOLLARD MOUNTED SIGN (TYP.)

PROVIDE AND INSTALL ADA RAMP (TYP.)

PROVIDE AND INSTALL ADA RAMP (TYP.)

PROVIDE AND INSTALL 5' WIDE MONOLITHIC CONCRETE CURB AND WALK (TYP.)

PROPOSED INDUSTRIAL BLDG B
937.5' X 320'
300,000 S.F.
60 LOADING SPACES
71 TRAILER SPACES

REFERENCE LINE – SEE SHEET SP-5

FOR PERMITTING PURPOSES ONLY
NOT RELEASED FOR CONSTRUCTION

GRAPHIC SCALE
40 20 0 40
SCALE IN FEET

© 2025 BL COMPANIES, INC. THESE DRAWINGS SHALL NOT BE UTILIZED BY ANY PERSON, FIRM OR CORPORATION WITHOUT THE SPECIFIC WRITTEN PERMISSION OF BL COMPANIES.

Architecture
Engineering
Environmental
Land Surveying

BL Companies

100 Constitution Plaza
10th Floor
Hartford, CT 06103
(860) 249-2200

STATE OF CONNECTION
TIMOTHY A. HOULE
31197
LICENSED
PROFESSIONAL ENGINEER

PROPOSED MANUFACTURING / INDUSTRIAL DEVELOPMENT

50-58 RAINBOW ROAD
EAST GRANBY, CONNECTICUT 06026

REVISIONS

No.	Date	Desc.

Designed	P.G.M.
Drawn	P.G.M.
Reviewed	T.A.H.
Scale	1"=40'
Project No.	2300888
Date	06/03/2025
CAD File: SP230088801	

Title

SITE PLAN

Sheet No.

SP-2

Xref (s): I:\02300\088\01 | X22300888\01 | 2024-2832 HWY - 05\18\101 Preliminary

...07/2025, PM:MATTHEW.GILVOREY,I:\02300\088\01\DWG\SP230088801.DWG,SP-2 (ANSI) ARCH

SITE PLAN LEGEND

	PROPERTY LINE
LOD	LIMIT OF DISTURBANCE/CONTRACT LIMIT LINE
	EXISTING WETLAND
	100' UPLAND REVIEW AREA
	SAWCUT LINE
	PROVIDE AND INSTALL CONCRETE CURB
x x x	PROVIDE AND INSTALL 6' HIGH CHAIN LINK FENCE
	PROVIDE AND INSTALL MODULAR BLOCK RETAINING WALL
	PROVIDE AND INSTALL CONCRETE SIDEWALK
	PROVIDE AND INSTALL HEAVY DUTY CONCRETE STRUCTURE
	PROVIDE AND INSTALL STANDARD DUTY BITUMINOUS CONCRETE PAVEMENT STRUCTURE
	PROVIDE AND INSTALL FULL DEPTH HEAVY DUTY BITUMINOUS CONCRETE PAVEMENT STRUCTURE
A	PROVIDE AND INSTALL TRAFFIC SIGN
#	PROPOSED PARKING COUNT

SIGN LEGEND

SIGN NO.	CT-DOT NO. OR MUTCD NO.	LEGEND
A	31-0532	STOP 30"
B	31-0629	
C	31-0648	VAN ACCESSIBLE
D	31-0282	
E	R5-2	
F	–	
G	–	
H	31-0222	

NOTE: HANDICAPPED SIGNS TO BE INSTALLED IN PIPE BOLLARDS (SEE DETAIL). ALL HANDICAP SIGNAGE TO CONFORM TO LATEST BUILDING CODE. SHEET ALUMINUM SIGN BLANKS SHALL BE CONSTRUCTED OF SHEET ALUMINUM ALLOY 6061-T6 OR ALLOY 5052-H38. SHEET ALUMINUM SIGN BLANKS SHALL CONFORM TO ASTM B209.

FEMA Flood Zone Line
Zone AE
Zone X

MFDR DISTRICT

EH DISTRICT

REFERENCE LINE – SEE SHEET SP-2

30' SIDE BUILDING SETBACK

30' SIDE BUILDING SETBACK

30' SIDE BUILDING SETBACK

30' SIDE BUILDING SETBACK

EXISTING SEWER PUMP STATION

SWMB #2

100' UPLAND REVIEW AREA

PROVIDE AND INSTALL ADA PAVEMENT MARKINGS (TYP.)

PROVIDE AND INSTALL METAL BEAM RAIL TYPE R-B 350 (TYP.)

PROVIDE AND INSTALL 4" SWL (TYP.)

PROVIDE AND INSTALL 12" SWSB (TYP.)

PROVIDE AND INSTALL CONCRETE CURB (TYP.)

PROPOSED LIMIT OF DISTURBANCE (TYP.)

PROVIDE AND INSTALL 5' WIDE MONOLITHIC CONCRETE WALK AND CURB (TYP.)

PROVIDE AND INSTALL METAL BEAM RAIL TYPE R-B 350 (TYP.)

PROVIDE AND INSTALL STANDARD DUTY BITUMINOUS CONCRETE PAVEMENT STRUCTURE (TYP.)

PROVIDE AND INSTALL 4" SWL (TYP.)

PROVIDE AND INSTALL METAL BEAM RAIL TYPE R-B 350 (TYP.)

PROVIDE AND INSTALL CONCRETE CURB (TYP.)

PROVIDE AND INSTALL CONCRETE TRANSFORMER PAD PER EVERSOURCE REQUIREMENTS

PROVIDE AND INSTALL 4" SDYL (TYP.)

PROPOSED EV READY PARKING LOCATION (TYP.)

PROVIDE AND INSTALL ADA RAMP (TYP.)

REFERENCE LINE – SEE SHEET SP-6

PROPOSED LIMIT OF DISTURBANCE (TYP.)

PROPOSED LIMIT OF DISTURBANCE (TYP.)

50' FRONT BUILDING SETBACK

25' FRONT PARKING SETBACK

FOR PERMITTING PURPOSES ONLY
NOT RELEASED FOR CONSTRUCTION

GRAPHIC SCALE
40 20 0 40
SCALE IN FEET

© 2025 BL COMPANIES, INC. THESE DRAWINGS SHALL NOT BE UTILIZED BY ANY PERSON, FIRM OR CORPORATION WITHOUT THE SPECIFIC WRITTEN PERMISSION OF BL COMPANIES.

Architecture
Engineering
Environmental
Land Surveying

BL Companies

100 Constitution Plaza
10th Floor
Hartford, CT 06103
(860) 249-2200

STATE OF CONNECTION
TIMOTHY A. HOULE
29117
LICENSED
PROFESSIONAL ENGINEER

PROPOSED MANUFACTURING / INDUSTRIAL DEVELOPMENT

50-58 RAINBOW ROAD
EAST GRANBY, CONNECTICUT 06026

REVISIONS
No. Date Desc.

Designed	P.G.M.
Drawn	P.G.M.
Reviewed	T.A.H.
Scale	1"=40'
Project No.	2300888
Date	06/03/2025
CAD File: SP230088801	

Title

SITE PLAN

Sheet No.

SP-3

Xref (s) : BI2300888801 ; XZ2300888801 ; XC2300888801 ; 2024-2832 HWY - 0518-101 Preliminary

XDATA(S): P:\ACTIVE\ CA \ CROSS\BI\ 2300888 \ DWG\ SP2300888801.DWG SP-3 24X36 ARCH

REFERENCE LINE – SEE SHEET SP-1

REFERENCE LINE – SEE SHEET SP-6

PROPOSED INDUSTRIAL BLDG A
1000' X 400'
400,000 S.F.
116 LOADING SPACES
109 TRAILER SPACES

END MONOLITHIC CONCRETE CURB AND WALK AT ISLAND (TYP.)

PROVIDE AND INSTALL CONCRETE TRANSFORMER PAD PER EVERSOURCE REQUIREMENTS

PROVIDE AND INSTALL ADA RAMP (TYP.)

PROPOSED EV READY PARKING LOCATION (TYP.)

PROVIDE AND INSTALL 5' WIDE MONOLITHIC CONCRETE CURB AND WALK (TYP.)

PROVIDE AND INSTALL 4" SWL (TYP.)

PROVIDE AND INSTALL BOLLARD MOUNTED SIGN (TYP.)

PROVIDE AND INSTALL ADA PAVEMENT MARKINGS (TYP.)

PROVIDE AND INSTALL ADA RAMP (TYP.)

PROVIDE AND INSTALL CANOPY

PROVIDE AND INSTALL CONCRETE RAMP

PROVIDE AND INSTALL MODULAR BLOCK RETAINING WALL

PROVIDE AND INSTALL STANDARD DUTY BITUMINOUS CONCRETE PAVEMENT STRUCTURE (TYP.)

PROVIDE AND INSTALL HEAVY DUTY BITUMINOUS CONCRETE PAVEMENT STRUCTURE (TYP.)

PROVIDE AND INSTALL 12" SWSB (TYP.)

PAVEMENT TRANSITION (TYP.)

PROVIDE AND INSTALL CONCRETE CURB (TYP.)

PROVIDE AND INSTALL DUMPSTER PAD AND DUMPSTER ENCLOSURE

PROVIDE AND INSTALL 4" SDYL (TYP.)

PAVEMENT TRANSITION (TYP.)

PROVIDE AND INSTALL 12" SWSB (TYP.)

PROVIDE AND INSTALL METAL STAIRS AND BOLLARDS. SEE ARCH PLANS FOR MORE INFO (TYP.)

PROVIDE AND INSTALL 4" SWL @ 45° AND SPACED 2' O.C. (TYP.)

PROVIDE AND INSTALL CONCRETE RETAINING WALL. SEE ARCH PLANS

PROVIDE AND INSTALL 4" SWL (TYP.)

PROPOSED LOADING DOCK (TYP.)

PROVIDE AND INSTALL HEAVY DUTY CONCRETE PAVEMENT

13.5' (TYP.)

PROVIDE AND INSTALL HEAVY DUTY BITUMINOUS CONCRETE PAVEMENT STRUCTURE (TYP.)

PROVIDE AND INSTALL CONCRETE CURB (TYP.)

PROVIDE AND INSTALL 4" SDYL (TYP.)

PROVIDE AND INSTALL 10' WIDE CONCRETE DOLLY PAD

PROVIDE AND INSTALL 4" SWL (TYP.)

PROPOSED LIMIT OF DISTURBANCE (TYP.)

PROVIDE AND INSTALL MODULAR BLOCK RETAINING WALL W/ CHAIN LINK FENCE

PROPOSED LIMIT OF DISTURBANCE (TYP.)

PROVIDE AND INSTALL MODULAR BLOCK RETAINING WALL W/ CHAIN LINK FENCE

APPROXIMATE TOWN LINE

10' REAR PARKING SETBACK

30' REAR PARKING SETBACK

EXISTING VERNAL POOL

PROVIDE AND INSTALL METAL BEAM RAIL TYPE R-B 350 (TYP.)

PROPOSED LIMIT OF DISTURBANCE (TYP.)

PROVIDE AND INSTALL 4" SDYL (TYP.)

PROVIDE AND INSTALL CONCRETE CURB (TYP.)

PROVIDE AND INSTALL HEAVY DUTY BITUMINOUS CONCRETE PAVEMENT STRUCTURE (TYP.)

REFERENCE LINE – SEE SHEET SP-7

EXISTING WETLAND LIMITS (TYP.)

100' UPLAND REVIEW AREA

SWMB #5

FOR PERMITTING PURPOSES ONLY
NOT RELEASED FOR CONSTRUCTION

GRAPHIC SCALE
40 20 0 40
SCALE IN FEET

SITE PLAN LEGEND

- PROPERTY LINE
- LOD — LIMIT OF DISTURBANCE/CONTRACT LIMIT LINE
- EXISTING WETLAND
- 100' UPLAND REVIEW AREA
- SAWCUT LINE
- PROVIDE AND INSTALL CONCRETE CURB
- x — x — x — PROVIDE AND INSTALL 6' HIGH CHAIN LINK FENCE
- PROVIDE AND INSTALL MODULAR BLOCK RETAINING WALL
- PROVIDE AND INSTALL CONCRETE SIDEWALK
- PROVIDE AND INSTALL HEAVY DUTY CONCRETE STRUCTURE
- PROVIDE AND INSTALL STANDARD DUTY BITUMINOUS CONCRETE PAVEMENT STRUCTURE
- PROVIDE AND INSTALL FULL DEPTH HEAVY DUTY BITUMINOUS CONCRETE PAVEMENT STRUCTURE
- PROVIDE AND INSTALL TRAFFIC SIGN
- PROPOSED PARKING COUNT

SIGN LEGEND

SIGN NO.	CT-DOT NO. OR MUTCD NO.	LEGEND
A	31-0532	STOP 30"
B	31-0629	HANDICAPPED PARKING PENALTY $250
C	31-0648	VAN ACCESSIBLE
D	31-0282	ONE WAY
E	R5-2	DO NOT ENTER
F	–	DO NOT ENTER
G	–	ONE WAY
H	31-0222	

NOTE: HANDICAPPED SIGNS TO BE INSTALLED IN PIPE BOLLARDS (SEE DETAIL). ALL HANDICAP SIGNAGE TO CONFORM TO LATEST BUILDING CODE. SHEET ALUMINUM SIGN BLANKS SHALL BE CONSTRUCTED OF SHEET ALUMINUM ALLOY 6061-T6 OR ALLOY 5052-H38. SHEET ALUMINUM SIGN BLANKS SHALL CONFORM TO ASTM B209.

© 2025 BL COMPANIES, INC. THESE DRAWINGS SHALL NOT BE UTILIZED BY ANY PERSON, FIRM OR CORPORATION WITHOUT THE SPECIFIC WRITTEN PERMISSION OF BL COMPANIES.

Architecture
Engineering
Environmental
Land Surveying
BL Companies
100 Constitution Plaza
10th Floor
Hartford, CT 06103
(860) 249-2200

STATE OF CONNECTION
TIMOTHY A. HOLLY
31117
LICENSED
PROFESSIONAL ENGINEER

PROPOSED MANUFACTURING / INDUSTRIAL DEVELOPMENT

50-58 RAINBOW ROAD
EAST GRANBY, CONNECTICUT 06026

REVISIONS
No. Date Desc.

Designed	P.G.M.
Drawn	P.G.M.
Reviewed	T.A.H.
Scale	1"=40'
Project No.	2300888
Date	06/03/2025
CAD File: SP230088801	

Title
SITE PLAN

Sheet No.
SP-4

Xref (s) : I:\2023\00888\01 : X:\2300888\01 : 2024-2832 HWY - 0518-101 Preliminary

I:\2023\01 PHANTREE Cr \CIVIL\DWG\230088801 SWMB.DWG SP-4 24X36 ARCH

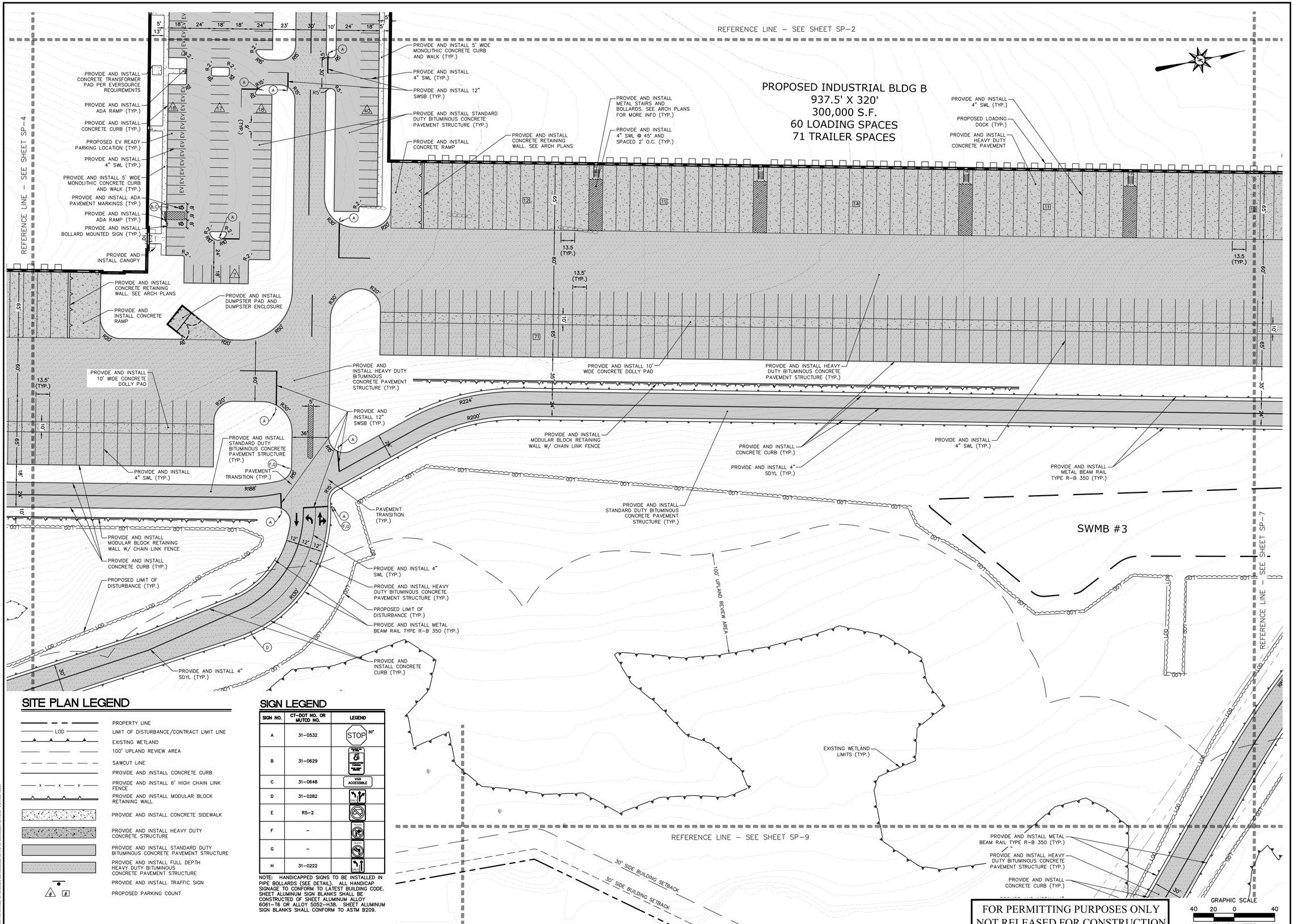

SITE PLAN LEGEND

- PROPERTY LINE
- LOD — LIMIT OF DISTURBANCE/CONTRACT LIMIT LINE
- EXISTING WETLAND
- 100' UPLAND REVIEW AREA
- SAWCUT LINE
- PROVIDE AND INSTALL CONCRETE CURB
- x — x — x — PROVIDE AND INSTALL 6' HIGH CHAIN LINK FENCE
- PROVIDE AND INSTALL MODULAR BLOCK RETAINING WALL
- PROVIDE AND INSTALL CONCRETE SIDEWALK
- PROVIDE AND INSTALL HEAVY DUTY CONCRETE STRUCTURE
- PROVIDE AND INSTALL STANDARD DUTY BITUMINOUS CONCRETE PAVEMENT STRUCTURE
- PROVIDE AND INSTALL FULL DEPTH HEAVY DUTY BITUMINOUS CONCRETE PAVEMENT STRUCTURE
- PROVIDE AND INSTALL TRAFFIC SIGN
- PROPOSED PARKING COUNT

SIGN LEGEND

SIGN NO.	CT-DOT NO. OR MUTCD NO.	LEGEND
A	31–0532	STOP 30"
B	31–0629	
C	31–0648	VAN ACCESSIBLE
D	31–0282	
E	R5–2	
F	–	
G	–	
H	31–0222	

NOTE: HANDICAPPED SIGNS TO BE INSTALLED IN PIPE BOLLARDS (SEE DETAIL). ALL HANDICAP SIGNAGE TO CONFORM TO LATEST BUILDING CODE. SHEET ALUMINUM SIGN BLANKS SHALL BE CONSTRUCTED OF SHEET ALUMINUM ALLOY 6061–T6 OR ALLOY 5052–H38. SHEET ALUMINUM SIGN BLANKS SHALL CONFORM TO ASTM B209.

© 2025 BL COMPANIES, INC. THESE DRAWINGS SHALL NOT BE UTILIZED BY ANY PERSON, FIRM OR CORPORATION WITHOUT THE SPECIFIC WRITTEN PERMISSION OF BL COMPANIES.

Architecture
Engineering
Environmental
Land Surveying
BL Companies
100 Constitution Plaza
10th Floor
Hartford, CT 06103
(860) 249-2200

STATE OF CONNECTION
TIMOTHY A. HOLL
LICENSED
PROFESSIONAL ENGINEER

PROPOSED MANUFACTURING / INDUSTRIAL DEVELOPMENT

50-58 RAINBOW ROAD
EAST GRANBY, CONNECTICUT 06026

REVISIONS
No. Date Desc.

Designed	P.G.M.
Drawn	P.G.M.
Reviewed	T.A.H.
Scale	1"=40'
Project No.	2300888
Date	06/03/2025
CAD File:	SP230088801

Title

SITE PLAN

Sheet No.

SP-5

Xref's: I:\B2023\088801\...\2024-2832 HWY - 0518-101 Preliminary

I:\B2023\...\PLANTIRES_EV's\B2023\88\2300888801\DWG\SP230088801 (EV's).DWG 8.5 PLOTS, 40SC

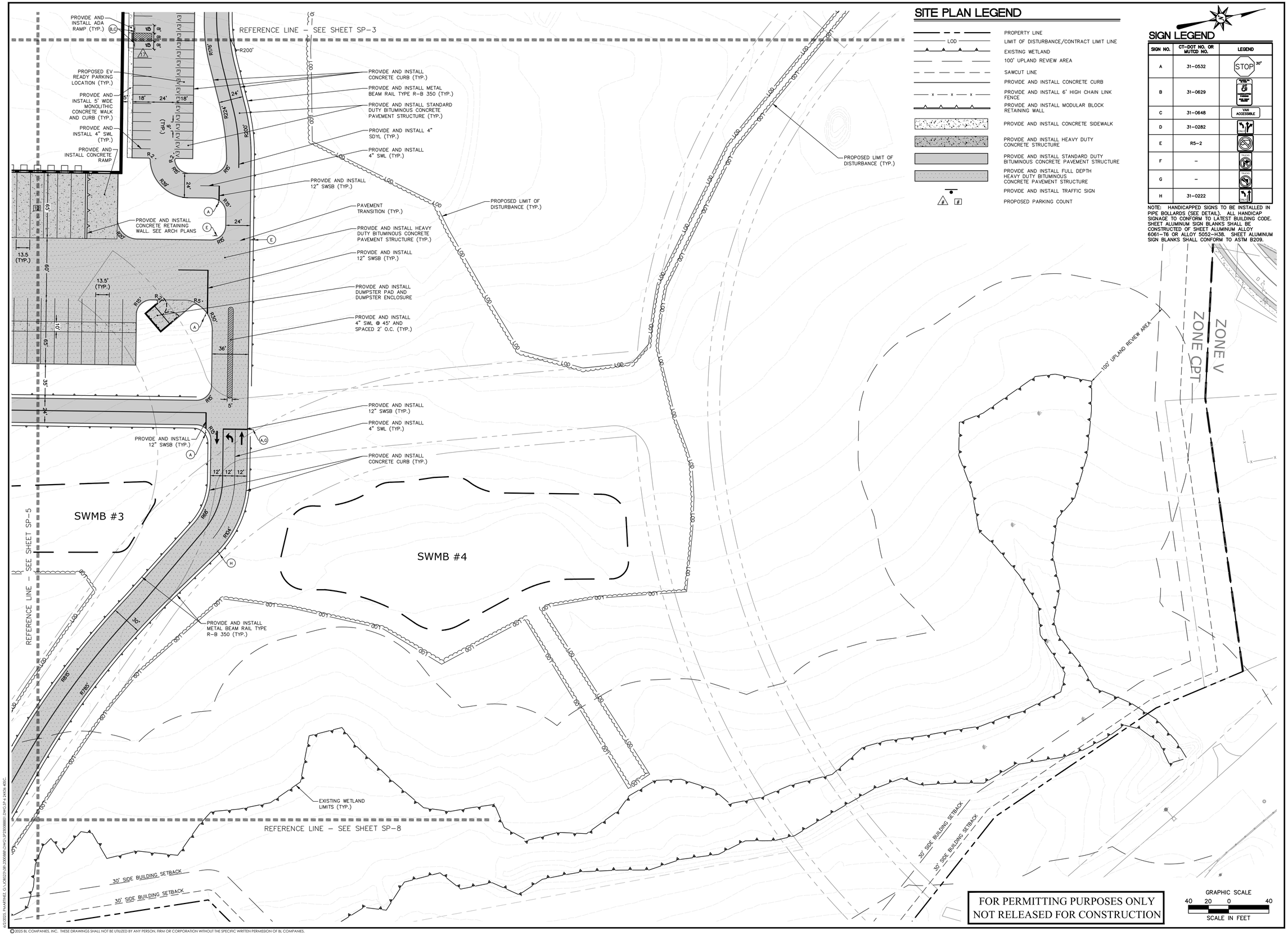

SITE PLAN LEGEND

- PROPERTY LINE
- LOD — LIMIT OF DISTURBANCE/CONTRACT LIMIT LINE
- EXISTING WETLAND
- 100' UPLAND REVIEW AREA
- SAWCUT LINE
- PROVIDE AND INSTALL CONCRETE CURB
- PROVIDE AND INSTALL 6' HIGH CHAIN LINK FENCE
- PROVIDE AND INSTALL MODULAR BLOCK RETAINING WALL
- PROVIDE AND INSTALL CONCRETE SIDEWALK
- PROVIDE AND INSTALL HEAVY DUTY CONCRETE STRUCTURE
- PROVIDE AND INSTALL STANDARD DUTY BITUMINOUS CONCRETE PAVEMENT STRUCTURE
- PROVIDE AND INSTALL FULL DEPTH HEAVY DUTY BITUMINOUS CONCRETE PAVEMENT STRUCTURE
- PROVIDE AND INSTALL TRAFFIC SIGN
- PROPOSED PARKING COUNT

SIGN LEGEND

SIGN NO.	CT-DOT NO. OR MUTCD NO.	LEGEND
A	31-0532	STOP 30"
B	31-0629	$ FINE FOR PARKING IN THIS SPACE
C	31-0648	VAN ACCESSIBLE
D	31-0282	
E	R5-2	
F	–	
G	–	
H	31-0222	ONE WAY

NOTE: HANDICAPPED SIGNS TO BE INSTALLED IN PIPE BOLLARDS (SEE DETAIL). ALL HANDICAP SIGNAGE TO CONFORM TO LATEST BUILDING CODE. SHEET ALUMINUM SIGN BLANKS SHALL BE CONSTRUCTED OF SHEET ALUMINUM ALLOY 6061-T6 OR ALLOY 5052-H38. SHEET ALUMINUM SIGN BLANKS SHALL CONFORM TO ASTM B209.

Architecture
Engineering
Environmental
Land Surveying

BL Companies

100 Constitution Plaza
10th Floor
Hartford, CT 06103
(860) 249-2200

STATE OF CONNECTICUT
TIMOTHY A. VOLL
39117
LICENSED
PROFESSIONAL ENGINEER

PROPOSED MANUFACTURING / INDUSTRIAL DEVELOPMENT

50-58 RAINBOW ROAD
EAST GRANBY, CONNECTICUT 06026

REVISIONS

No.	Date	Desc.

Designed	P.G.M.
Drawn	P.G.M.
Reviewed	T.A.H.
Scale	1"=40'
Project No.	2300888
Date	06/03/2025
CAD File: SP230088801	

Title

SITE PLAN

Sheet No.

SP-6

Xref (s) : BD230088801 | X2300888801 | XC230088801 | 2024-2832 HWY : 0516-101 Preliminary

© 2025 BL COMPANIES, INC. THESE DRAWINGS SHALL NOT BE UTILIZED BY ANY PERSON, FIRM OR CORPORATION WITHOUT THE SPECIFIC WRITTEN PERMISSION OF BL COMPANIES.

4/7/2025, EMARTINEZ, G:\CAD\23\01\2300888\DWG\SP2300888801.DWG 34 x 24(36) ARCH

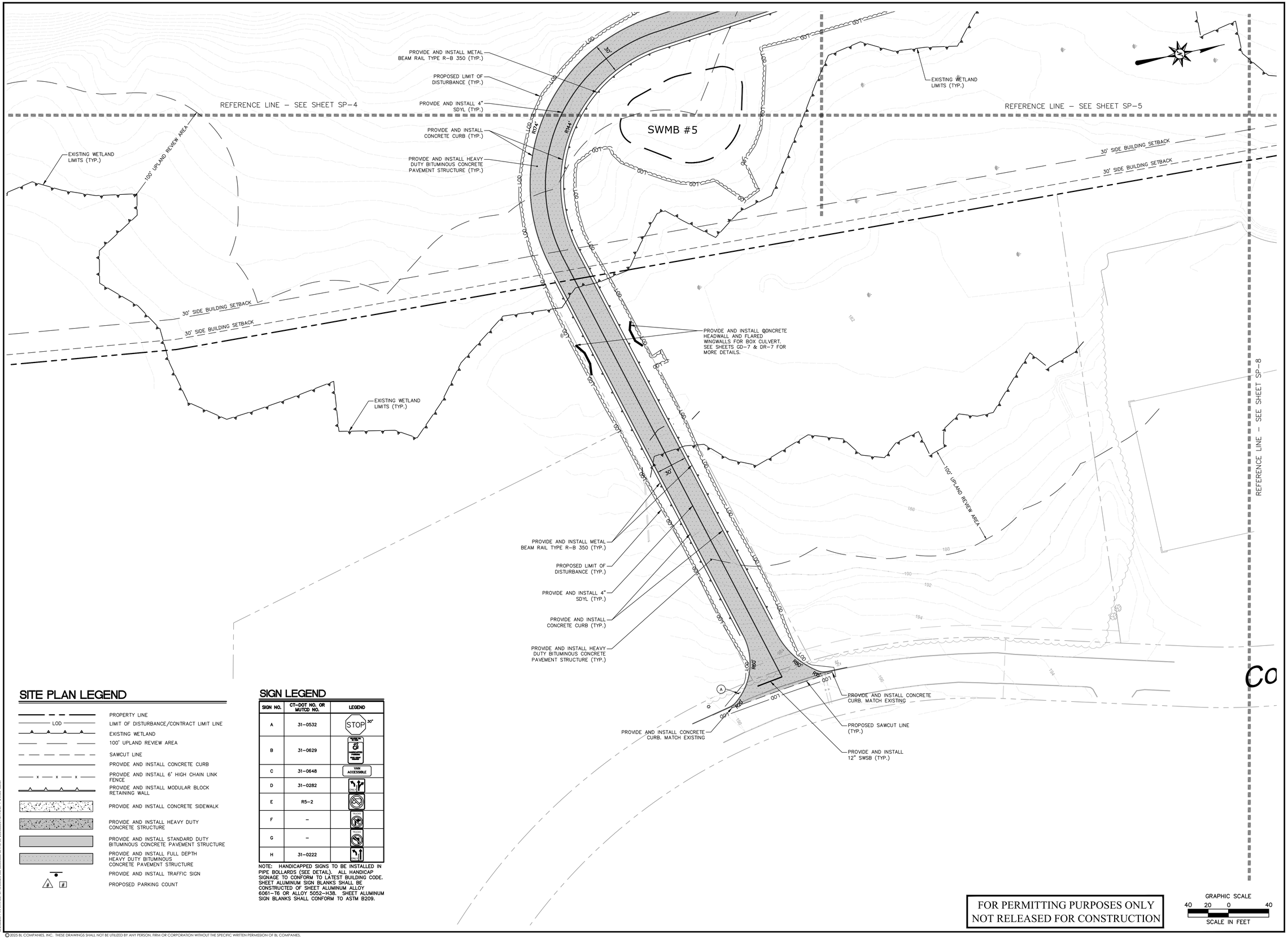

SITE PLAN LEGEND

- PROPERTY LINE
- LIMIT OF DISTURBANCE/CONTRACT LIMIT LINE (LOD)
- EXISTING WETLAND
- 100' UPLAND REVIEW AREA
- SAWCUT LINE
- PROVIDE AND INSTALL CONCRETE CURB
- PROVIDE AND INSTALL 6' HIGH CHAIN LINK FENCE
- PROVIDE AND INSTALL MODULAR BLOCK RETAINING WALL
- PROVIDE AND INSTALL CONCRETE SIDEWALK
- PROVIDE AND INSTALL HEAVY DUTY CONCRETE STRUCTURE
- PROVIDE AND INSTALL STANDARD DUTY BITUMINOUS CONCRETE PAVEMENT STRUCTURE
- PROVIDE AND INSTALL FULL DEPTH HEAVY DUTY BITUMINOUS CONCRETE PAVEMENT STRUCTURE
- PROVIDE AND INSTALL TRAFFIC SIGN
- PROPOSED PARKING COUNT

SIGN LEGEND

SIGN NO.	CT–DOT NO. OR MUTCD NO.	LEGEND
A	31–0532	STOP 30"
B	31–0629	TUNNEL TO TOWABOAT FURNISH TUNNEL LIGHT
C	31–0648	VAN ACCESSIBLE
D	31–0282	ONE WAY
E	R5–2	
F	–	
G	–	
H	31–0222	ONE WAY

NOTE: HANDICAPPED SIGNS TO BE INSTALLED IN PIPE BOLLARDS (SEE DETAIL). ALL HANDICAP SIGNAGE TO CONFORM TO LATEST BUILDING CODE. SHEET ALUMINUM SIGN BLANKS SHALL BE CONSTRUCTED OF SHEET ALUMINUM ALLOY 6061–T6 OR ALLOY 5052–H38. SHEET ALUMINUM SIGN BLANKS SHALL CONFORM TO ASTM B209.

FOR PERMITTING PURPOSES ONLY
NOT RELEASED FOR CONSTRUCTION

GRAPHIC SCALE
40 20 0 40
SCALE IN FEET

© 2025 BL COMPANIES, INC. THESE DRAWINGS SHALL NOT BE UTILIZED BY ANY PERSON, FIRM OR CORPORATION WITHOUT THE SPECIFIC WRITTEN PERMISSION OF BL COMPANIES.

Architecture
Engineering
Environmental
Land Surveying
BL Companies
100 Constitution Plaza
10th Floor
Hartford, CT 06103
(860) 249-2200

STATE OF CONNECTICUT
TIMOTHY A. HOLLY
30114
LICENSED PROFESSIONAL ENGINEER

PROPOSED MANUFACTURING / INDUSTRIAL DEVELOPMENT
50-58 RAINBOW ROAD
EAST GRANBY, CONNECTICUT 06026

REVISIONS
No. Date Desc.

Designed	P.G.M.
Drawn	P.G.M.
Reviewed	T.A.H.
Scale	1"=40'
Project No.	2300888
Date	06/03/2025
CAD File: SP23008880l	

Title
SITE PLAN

Sheet No.
SP-7

Xref (s) : BD23008880l ; XZ23008880l ; XC23008880l ; 2024-2832 HWY ; 0515-101 Preliminary

4/2/2025, RMARTINEZ, G:\CAD\23\SP\23008880l\DWG\SP23008880l.DWG,SP 2 ANSI A (EC)

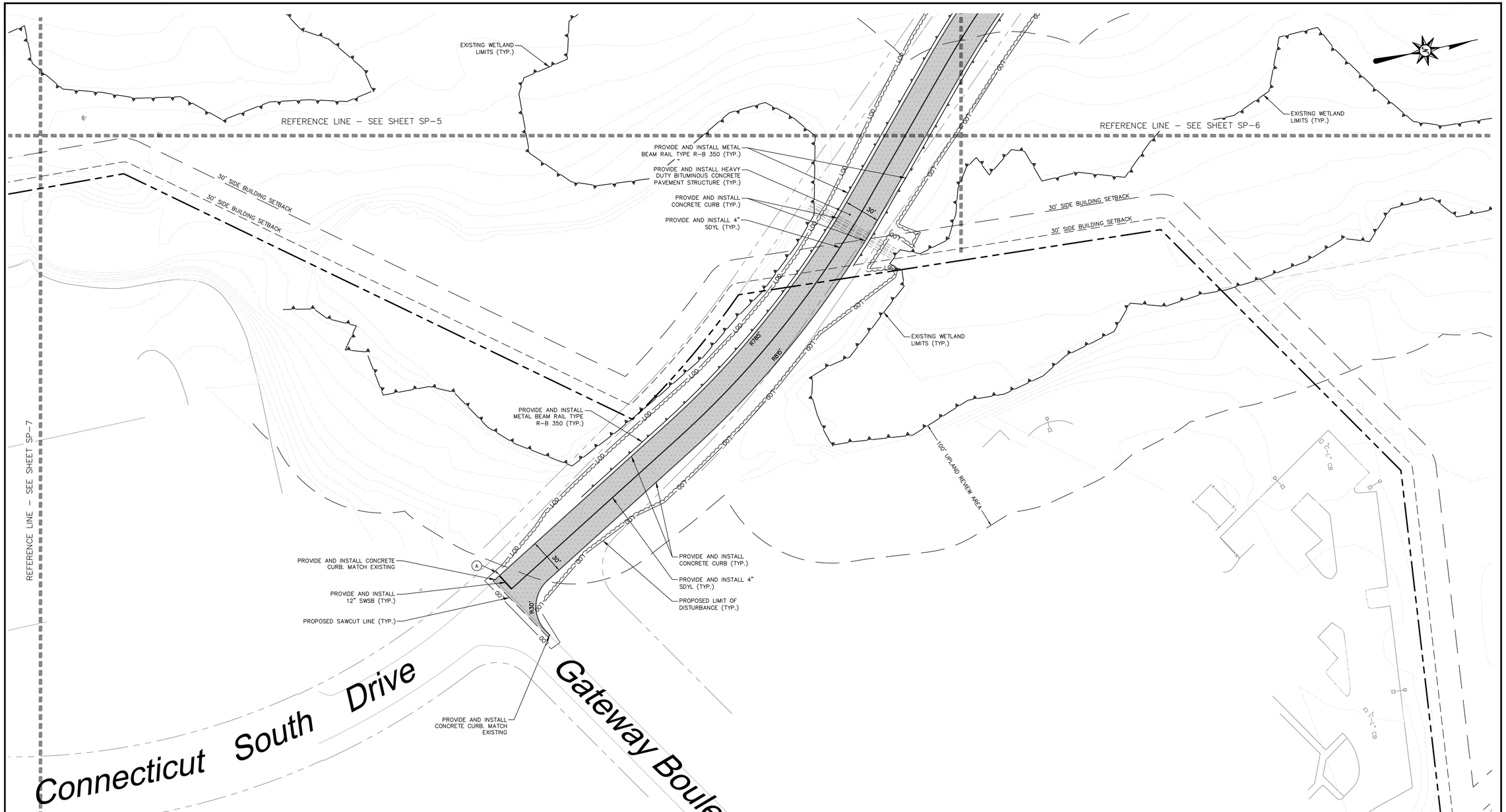

SITE PLAN LEGEND

- PROPERTY LINE
- LOD — LIMIT OF DISTURBANCE/CONTRACT LIMIT LINE
- EXISTING WETLAND
- 100' UPLAND REVIEW AREA
- SAWCUT LINE
- PROVIDE AND INSTALL CONCRETE CURB
- PROVIDE AND INSTALL 6' HIGH CHAIN LINK FENCE
- PROVIDE AND INSTALL MODULAR BLOCK RETAINING WALL
- PROVIDE AND INSTALL CONCRETE SIDEWALK
- PROVIDE AND INSTALL HEAVY DUTY CONCRETE STRUCTURE
- PROVIDE AND INSTALL STANDARD DUTY BITUMINOUS CONCRETE PAVEMENT STRUCTURE
- PROVIDE AND INSTALL FULL DEPTH HEAVY DUTY BITUMINOUS CONCRETE PAVEMENT STRUCTURE
- PROVIDE AND INSTALL TRAFFIC SIGN
- PROPOSED PARKING COUNT

SIGN LEGEND

SIGN NO.	CT-DOT NO. OR MUTCD NO.	LEGEND
A	31-0532	STOP 30"
B	31-0629	
C	31-0648	VAN ACCESSIBLE
D	31-0282	
E	R5-2	
F	–	
G	–	
H	31-0222	

NOTE: HANDICAPPED SIGNS TO BE INSTALLED IN PIPE BOLLARDS (SEE DETAIL). ALL HANDICAP SIGNAGE TO CONFORM TO LATEST BUILDING CODE. SHEET ALUMINUM SIGN BLANKS SHALL BE CONSTRUCTED OF SHEET ALUMINUM ALLOY 6061-T6 OR ALLOY 5052-H38. SHEET ALUMINUM SIGN BLANKS SHALL CONFORM TO ASTM B209.

FOR PERMITTING PURPOSES ONLY
NOT RELEASED FOR CONSTRUCTION

GRAPHIC SCALE
40 20 0 40
SCALE IN FEET

© 2025 BL COMPANIES, INC. THESE DRAWINGS SHALL NOT BE UTILIZED BY ANY PERSON, FIRM OR CORPORATION WITHOUT THE SPECIFIC WRITTEN PERMISSION OF BL COMPANIES.

BL Companies
Architecture
Engineering
Environmental
Land Surveying

100 Constitution Plaza
10th Floor
Hartford, CT 06103
(860) 249-2200

STATE OF CONNECTICUT
TIMOTHY A. HOULE
36117
LICENSED
PROFESSIONAL ENGINEER

PROPOSED MANUFACTURING / INDUSTRIAL DEVELOPMENT

50-58 RAINBOW ROAD
EAST GRANBY, CONNECTICUT 06026

REVISIONS

No.	Date	Desc.

Designed	P.G.M.
Drawn	P.G.M.
Reviewed	T.A.H.
Scale	SCALE
Project No.	2300888
Date	06/03/2025
CAD File: SP230088801	

Title
SITE PLAN

Sheet No.
SP-8

Xref (s): : BD230088801 : XC230088801 : 2024-2832 HWY : 0518-101 Preliminary

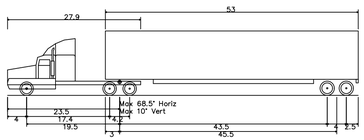

WB-67 – Interstate Semi-Trailer

Overall Length	73.501ft
Overall Width	8.500ft
Overall Body Height	13.500ft
Min Body Ground Clearance	1.334ft
Max Track Width	8.500ft
Lock-to-lock time	6.00s
Max Steering Angle (Virtual)	28.40°

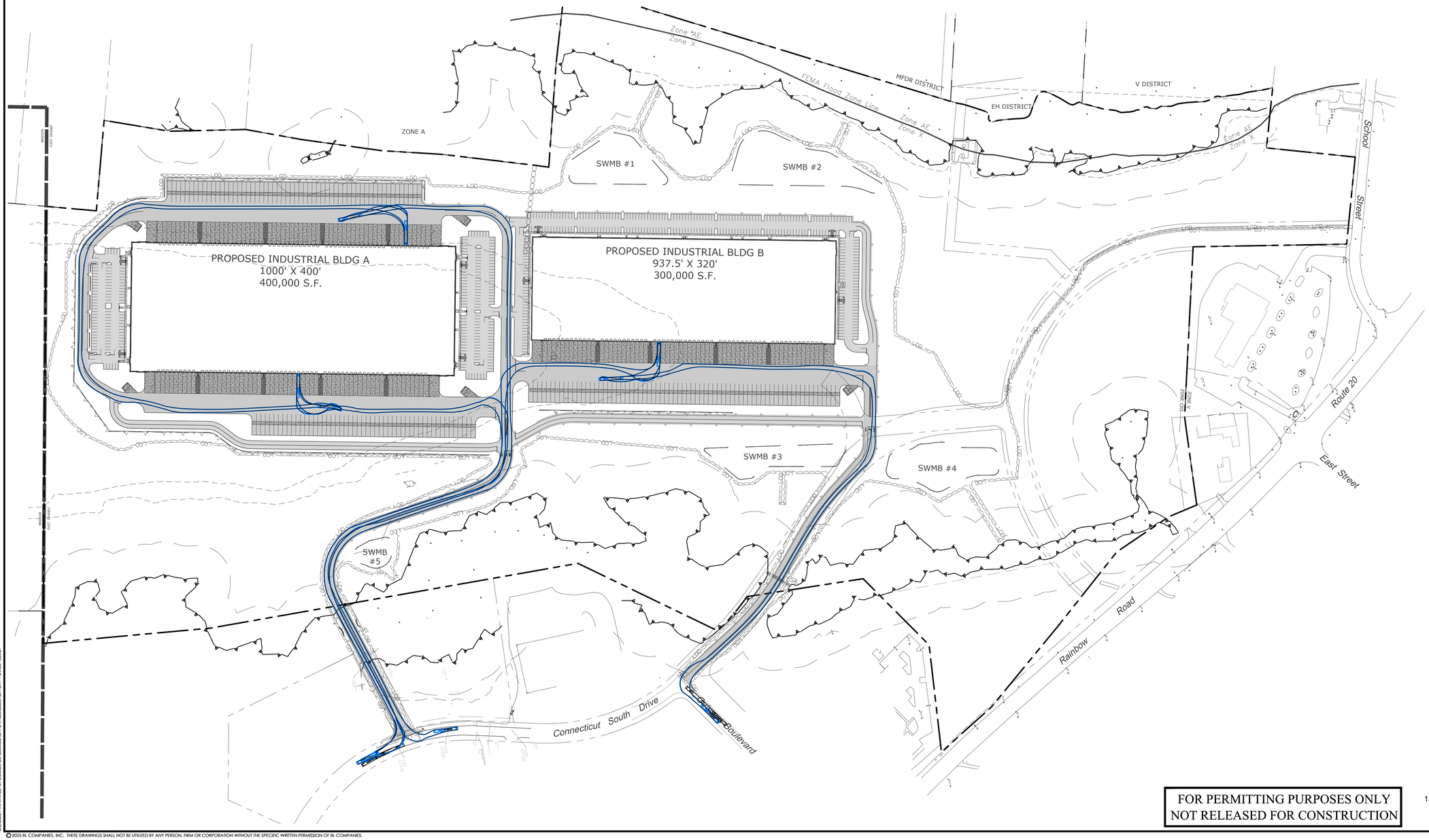
ZONE A
SWMB #1
SWMB #2
SWMB #3
SWMB #4
SWMB #5
PROPOSED INDUSTRIAL BLDG A
1000' X 400'
400,000 S.F.
PROPOSED INDUSTRIAL BLDG B
937.5' X 320'
300,000 S.F.
Zone AE
Zone X
FEMA Flood Zone Line
MFDR DISTRICT
EH DISTRICT
V DISTRICT
School Street
Route 20
East Street
Rainbow Road
Connecticut South Drive
Connector Boulevard
INBOUND EXIT DRIVE
INBOUND EXIT DRIVE
EXIT DRIVE
EXIT DRIVE

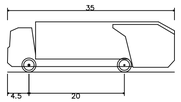

Rear–Load Garbage Truck	
Overall Length	35.000ft
Overall Width	8.375ft
Overall Body Height	10.546ft
Min Body Ground Clearance	1.000ft
Track Width	8.375ft
Lock–to–lock time	6.00s
Curb to Curb Turning Radius	29.300ft

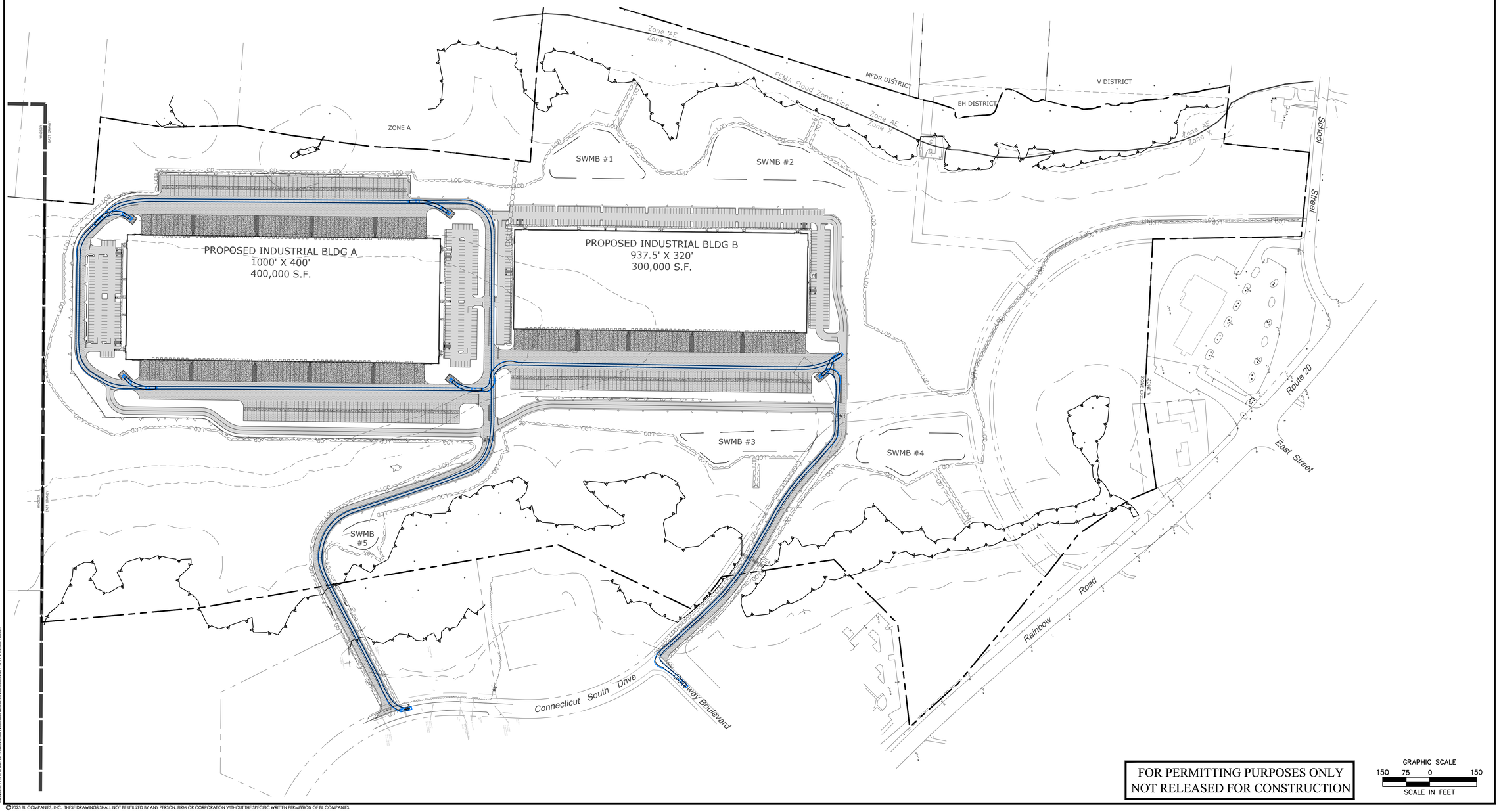

FOR PERMITTING PURPOSES ONLY
NOT RELEASED FOR CONSTRUCTION

GRAPHIC SCALE
150 75 0 150
SCALE IN FEET

© 2025 BL COMPANIES, INC. THESE DRAWINGS SHALL NOT BE UTILIZED BY ANY PERSON, FIRM OR CORPORATION WITHOUT THE SPECIFIC WRITTEN PERMISSION OF BL COMPANIES.

BL Companies
Architecture
Engineering
Environmental
Land Surveying

100 Constitution Plaza
10th Floor
Hartford, CT 06103
(860) 249-2200

STATE OF CONNECTICUT
TIMOTHY A. HOULE
LICENSED
PROFESSIONAL ENGINEER

PROPOSED MANUFACTURING / INDUSTRIAL DEVELOPMENT

50-58 RAINBOW ROAD
EAST GRANBY, CONNECTICUT 06026

REVISIONS

No.	Date	Desc.

Designed	J.M.M.
Drawn	J.M.M.
Reviewed	T.A.H.
Scale	1"=150'
Project No.	2300888
Date	06/03/2025
CAD File:	TT230088802

Title
OVERALL TRUCK TURNING PLAN

Sheet No.
TT-2

GRADING AND DRAINAGE LEGEND

	PROPERTY LINE
LOD	LIMIT OF DISTURBANCE/CONTRACT LIMIT LINE
	EXISTING WETLAND
	100' UPLAND REVIEW AREA
	ZONING BOUNDARY
	SAWCUT LINE
	PROVIDE AND INSTALL STORM LINE
	PROVIDE AND INSTALL TYPE C CATCH BASIN
	PROVIDE AND INSTALL TYPE C-L CATCH BASIN
	PROVIDE AND INSTALL DRAINAGE MANHOLE OR OUTLET CONTROL STRUCTURE
	PROVIDE AND INSTALL FLARED END SECTION
	PROPOSED CONTOUR LINE (2' INTERVAL)
60	EXISTING CONTOUR LINE (2' INTERVAL)
×200.00	PROPOSED SPOT GRADE

SPOT GRADE ABBREVIATIONS

BC	BOTTOM OF CURB
TC	TOP OF CURB
BW	BOTTOM OF WALL
TW	TOP OF WALL
MEX	MEET EXISTING CONDITION

NOTE: ALL NEW CATCH BASINS SHALL BE PROVIDED WITH 4' DEEP SUMPS AND HOODED OUTLETS

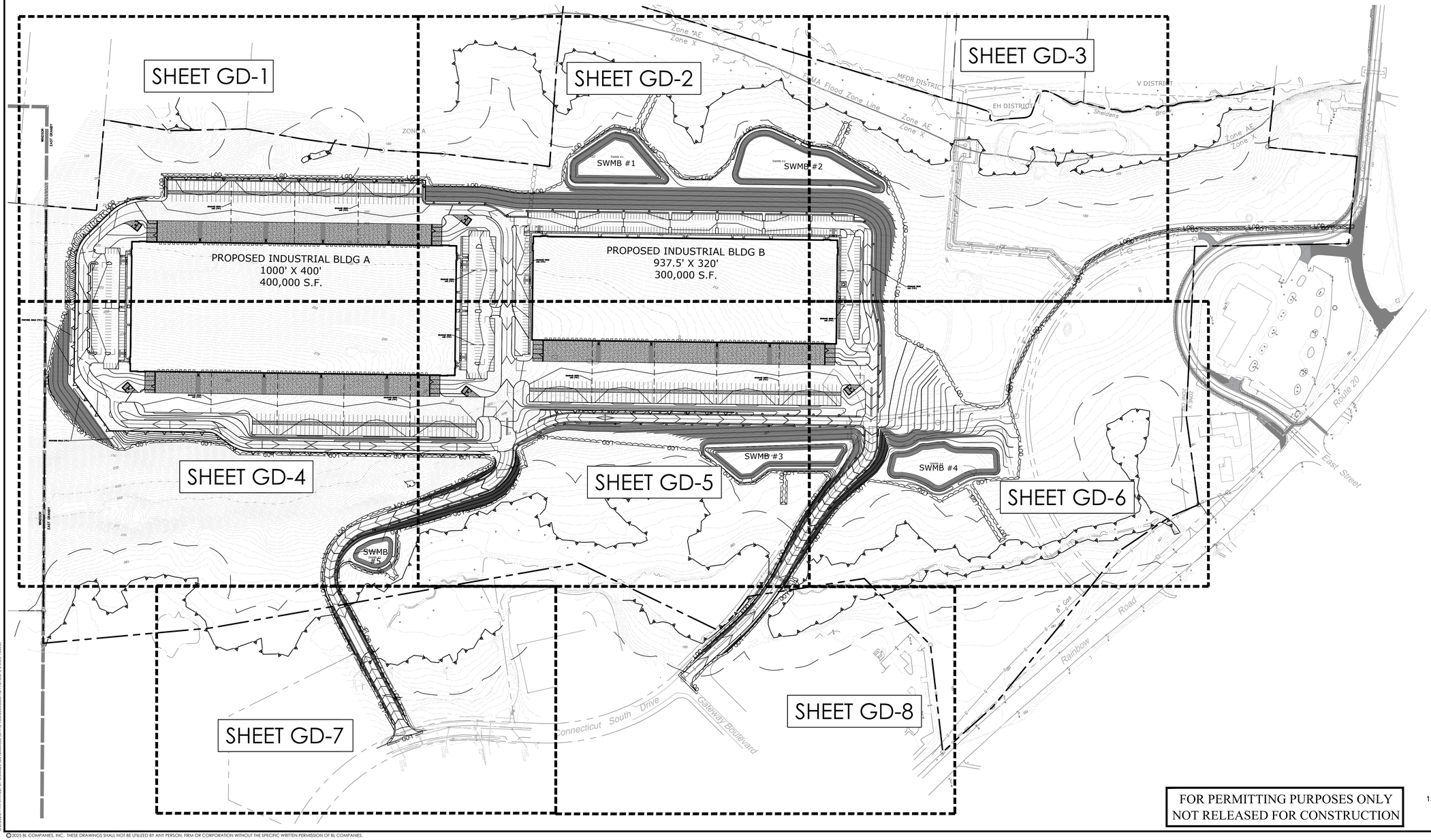

FOR PERMITTING PURPOSES ONLY
NOT RELEASED FOR CONSTRUCTION

GRAPHIC SCALE
150 75 0 150
SCALE IN FEET

© 2025 BL COMPANIES, INC. THESE DRAWINGS SHALL NOT BE UTILIZED BY ANY PERSON, FIRM OR CORPORATION WITHOUT THE SPECIFIC WRITTEN PERMISSION OF BL COMPANIES.

Architecture
Engineering
Environmental
Land Surveying

BL Companies

100 Constitution Plaza
10th Floor
Hartford, CT 06103
(860) 249-2200

STATE OF CONNECTICUT
TIMOTHY A. HOYT
31111
LICENSED
PROFESSIONAL ENGINEER

PROPOSED MANUFACTURING / INDUSTRIAL DEVELOPMENT

50-58 RAINBOW ROAD
EAST GRANBY, CONNECTICUT 06026

REVISIONS

No.	Date	Desc.

Designed	P.G.M.
Drawn	P.G.M.
Reviewed	T.A.H.
Scale	1"=150'
Project No.	2300888
Date	06/03/2025
CAD File: GD230088801	

Title

OVERALL GRADING PLAN

Sheet No.

GD-0

Xref (s) : BD230088801 ; XC230088801 ; XC230088802 ; 2024-2632 HWY ; 05\19 10 Preliminary

J:\2023\23-PM\ARTIFACTS\CIVIL\DESIGN\2300888\DWG\GD230088801.DWG,GD-0,2400X1,1:1

© 2025 BL COMPANIES, INC. THESE DRAWINGS SHALL NOT BE UTILIZED BY ANY PERSON, FIRM OR CORPORATION WITHOUT THE SPECIFIC WRITTEN PERMISSION OF BL COMPANIES.

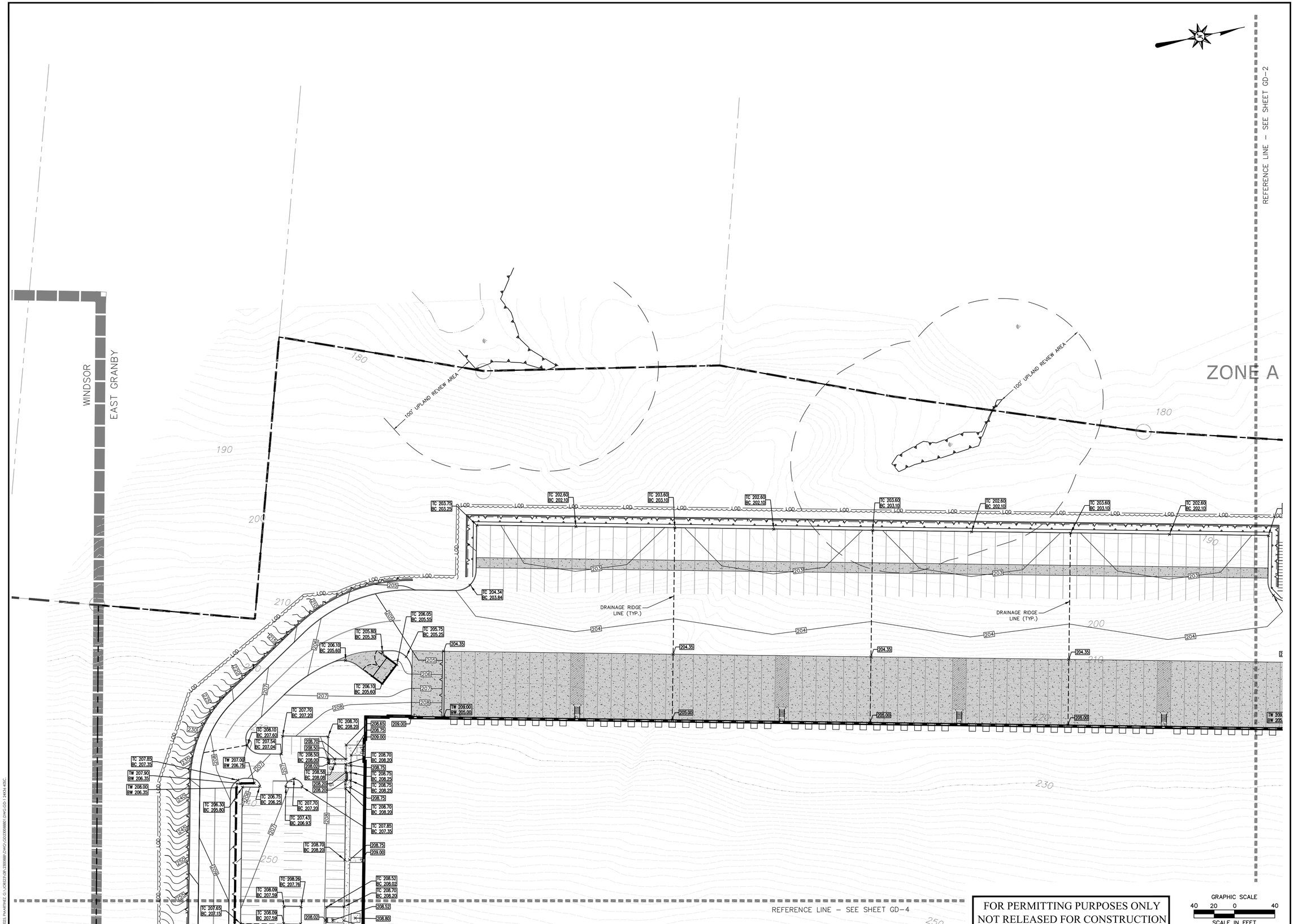

FOR PERMITTING PURPOSES ONLY
NOT RELEASED FOR CONSTRUCTION

Architecture
Engineering
Environmental
Land Surveying

BL Companies

100 Constitution Plaza
10th Floor
Hartford, CT 06103
(860) 249-2200

STATE OF CONNECTICUT
TIMOTHY A. HOULE
LICENSED
PROFESSIONAL ENGINEER

PROPOSED MANUFACTURING / INDUSTRIAL DEVELOPMENT

50-58 RAINBOW ROAD
EAST GRANBY, CONNECTICUT 06026

REVISIONS

No.	Date	Desc.

Designed	P.G.M.
Drawn	P.G.M.
Reviewed	T.A.H.
Scale	1"=40'
Project No.	2300888
Date	06/03/2025
CAD File: GD230088801	

Title

GRADING PLAN

Sheet No.

GD-1

Xref (s): : BD230088801 : XC230088801 : XC230088802 : XC230088803 : 2024-2832 HWY : 0518-101 Preliminary

4/2/2025 PMARTINEZ G:\JOB\2300888\DWG\GD230088801.DWG GD-1 24X34 40SC

© 2025 BL COMPANIES, INC. THESE DRAWINGS SHALL NOT BE UTILIZED BY ANY PERSON, FIRM OR CORPORATION WITHOUT THE SPECIFIC WRITTEN PERMISSION OF BL COMPANIES.

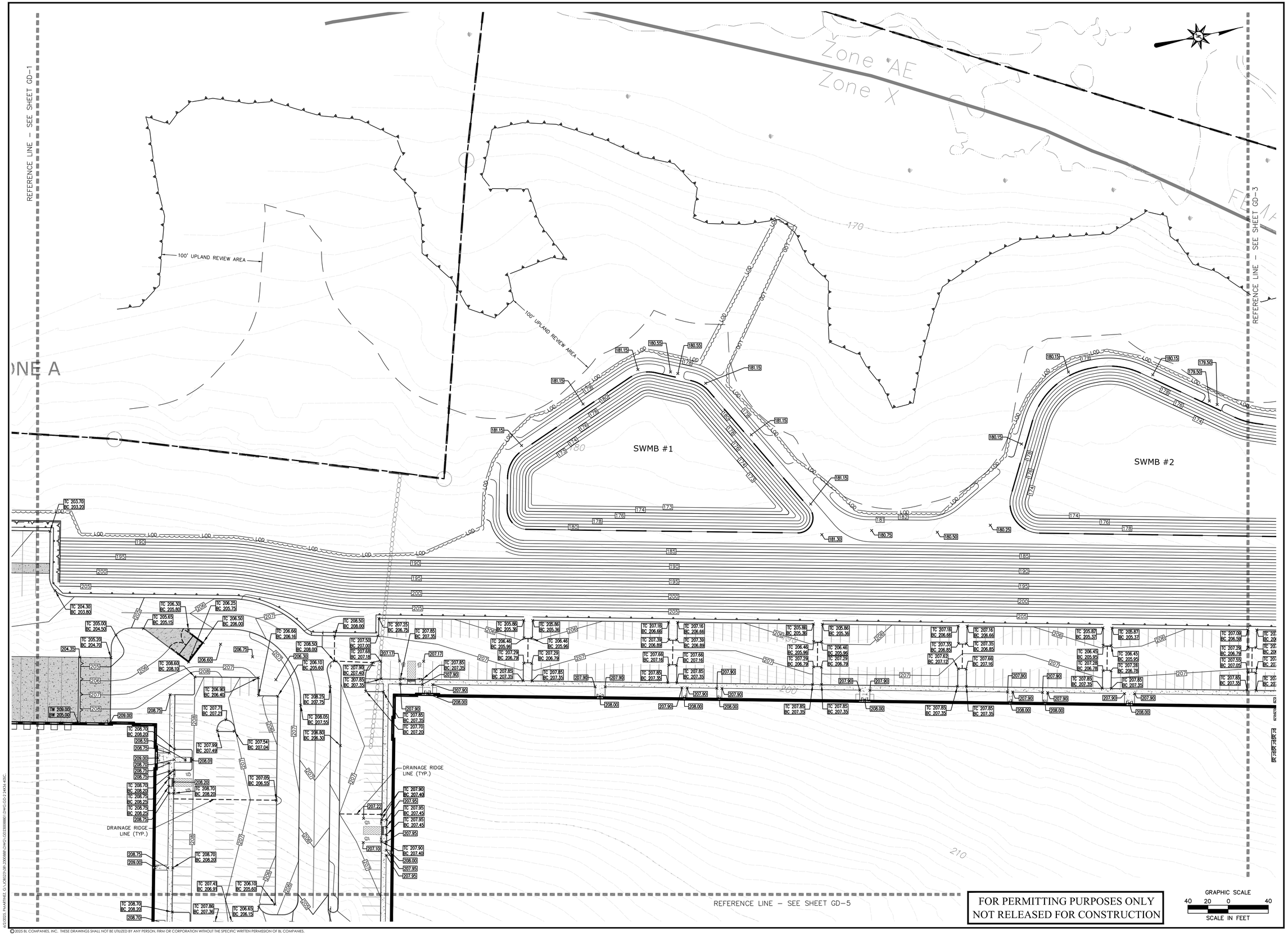

FOR PERMITTING PURPOSES ONLY
NOT RELEASED FOR CONSTRUCTION

Architecture
Engineering
Environmental
Land Surveying

BL Companies

100 Constitution Plaza
10th Floor
Hartford, CT 06103
(860) 249-2200

STATE OF CONNECTICUT
TIMOTHY A. HOULE
LICENSED
PROFESSIONAL ENGINEER

PROPOSED MANUFACTURING / INDUSTRIAL DEVELOPMENT

50-58 RAINBOW ROAD
EAST GRANBY, CONNECTICUT 06026

REVISIONS

No.	Date	Desc.

Designed	P.G.M.
Drawn	P.G.M.
Reviewed	T.A.H.
Scale	1"=40'
Project No.	2300888
Date	06/03/2025
CAD File: GD230088801	

Title

GRADING PLAN

Sheet No.

GD-2

Xref (s): BD230088801 : XZ230088801 : XC230088801 : XC230088802 : XC230088803 : 2024-2832 HWY : 0518-101 Preliminary

4/2/2025, PMARTINEZ, G:\JOBS23\08\2300888\DWG\GD230088801.DWG-GD-2 24X36 40SC

© 2025 BL COMPANIES, INC. THESE DRAWINGS SHALL NOT BE UTILIZED BY ANY PERSON, FIRM OR CORPORATION WITHOUT THE SPECIFIC WRITTEN PERMISSION OF BL COMPANIES.

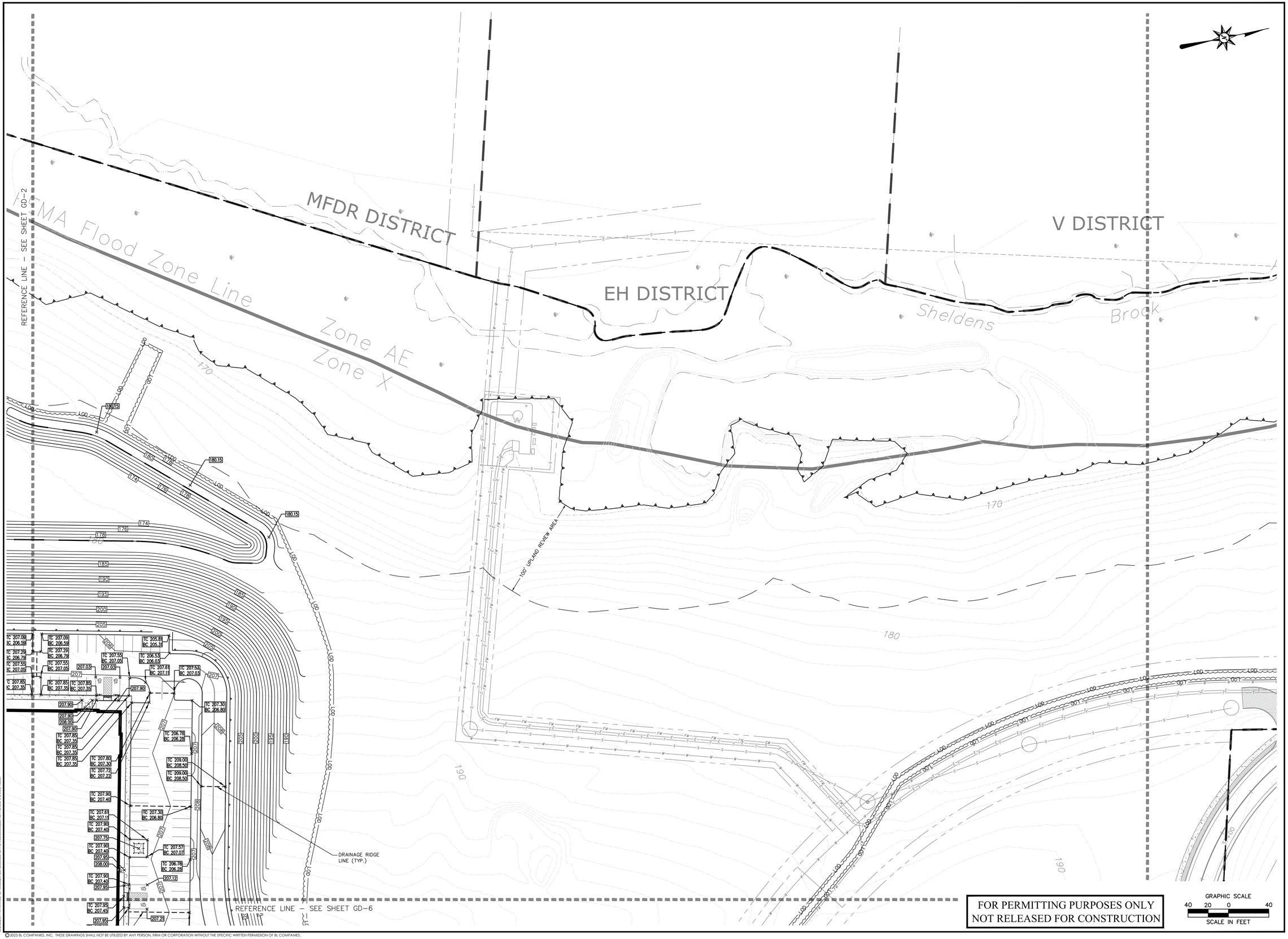

FOR PERMITTING PURPOSES ONLY
NOT RELEASED FOR CONSTRUCTION

GRAPHIC SCALE
40 20 0 40
SCALE IN FEET

© 2025 BL COMPANIES, INC. THESE DRAWINGS SHALL NOT BE UTILIZED BY ANY PERSON, FIRM OR CORPORATION WITHOUT THE SPECIFIC WRITTEN PERMISSION OF BL COMPANIES.

Architecture
Engineering
Environmental
Land Surveying

BL Companies

100 Constitution Plaza
10th Floor
Hartford, CT 06103
(860) 249-2200

STATE OF CONNECTICUT
TIMOTHY A. VOUTE
21117
LICENSED
PROFESSIONAL ENGINEER

PROPOSED MANUFACTURING / INDUSTRIAL DEVELOPMENT

50-58 RAINBOW ROAD
EAST GRANBY, CONNECTICUT 06026

REVISIONS

No.	Date	Desc.

Designed	P.G.M.
Drawn	P.G.M.
Reviewed	T.A.H.
Scale	1"=40'
Project No.	2300888
Date	06/03/2025

CAD File:
GD230088801

Title

GRADING PLAN

Sheet No.

GD-3

Xref (s) : BD230088801 ; XC230088801 ; XC230088802 ; XC230088803 ; 2024-2852 HWY ; 0818-101 Preliminary

G:\PROJECTS\ PHANTREE CA \CIVIL\DWGS\ 2300888 \DWG\ GD230088801 DWG GD-3 24X36 ARC

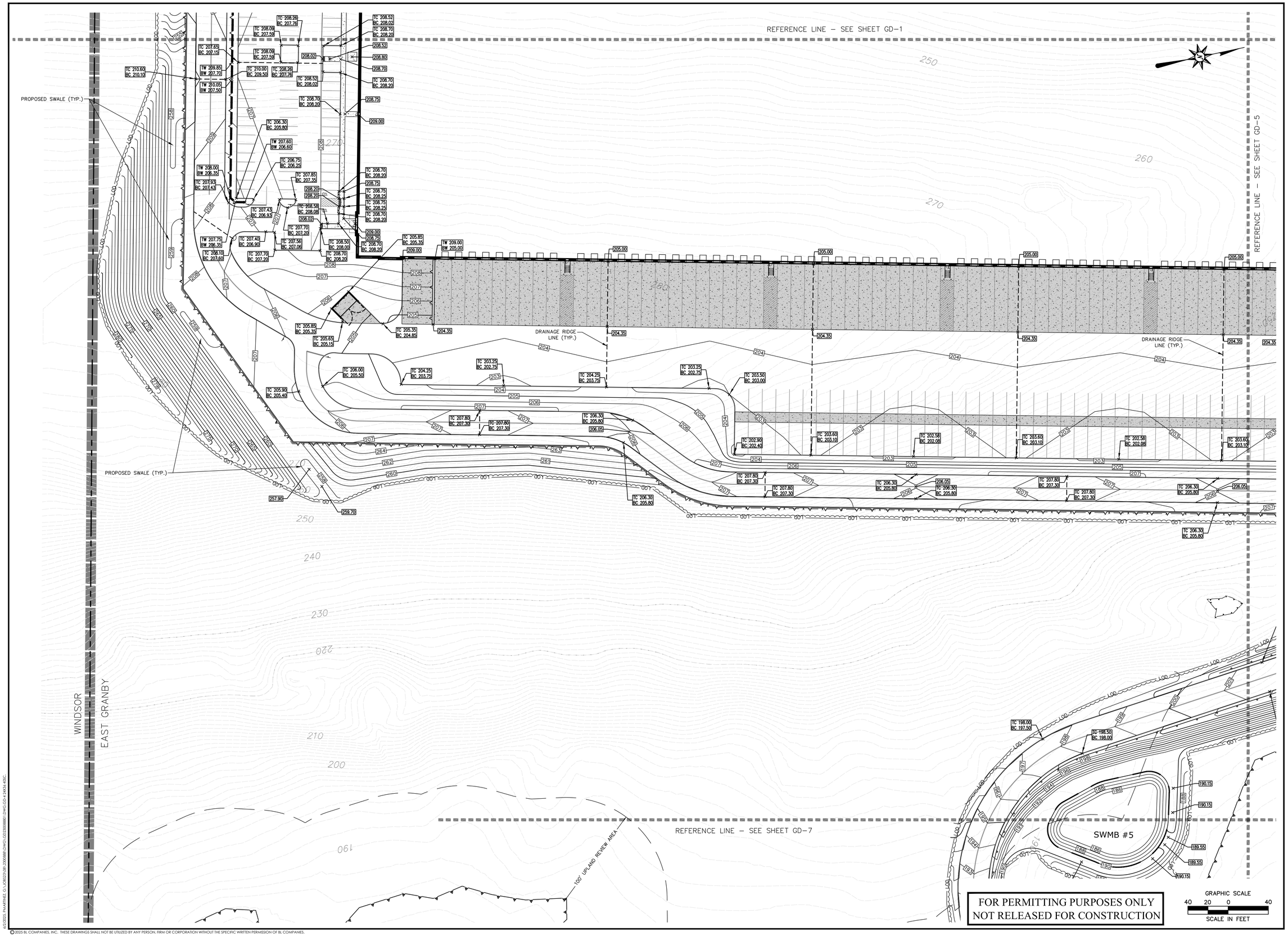

FOR PERMITTING PURPOSES ONLY
NOT RELEASED FOR CONSTRUCTION

BL Companies
Architecture
Engineering
Environmental
Land Surveying

100 Constitution Plaza
10th Floor
Hartford, CT 06103
(860) 249-2200

STATE OF CONNECTICUT
TIMOTHY A. HOULE
38117
LICENSED
PROFESSIONAL ENGINEER

PROPOSED MANUFACTURING / INDUSTRIAL DEVELOPMENT

50-58 RAINBOW ROAD
EAST GRANBY, CONNECTICUT 06026

REVISIONS

No.	Date	Desc.

Designed	P.G.M.
Drawn	P.G.M.
Reviewed	INITIALS
Scale	1"=40'
Project No.	2300888
Date	06/03/2025
CAD File: GD230088801	

Title

GRADING PLAN

Sheet No.

GD-4

Xref (s): : BD230088801 : XZ230088801 : XC230088801 : XC230088802 : XC230088803 : 2024-2832 HWY : 0518-101 Preliminary

4/2/2025, PMARTINEZ, G:\JOBS23\08\2300888\DWG\GD230088801.DWG-GD-4 24X36 40SC.

© 2025 BL COMPANIES, INC. THESE DRAWINGS SHALL NOT BE UTILIZED BY ANY PERSON, FIRM OR CORPORATION WITHOUT THE SPECIFIC WRITTEN PERMISSION OF BL COMPANIES.

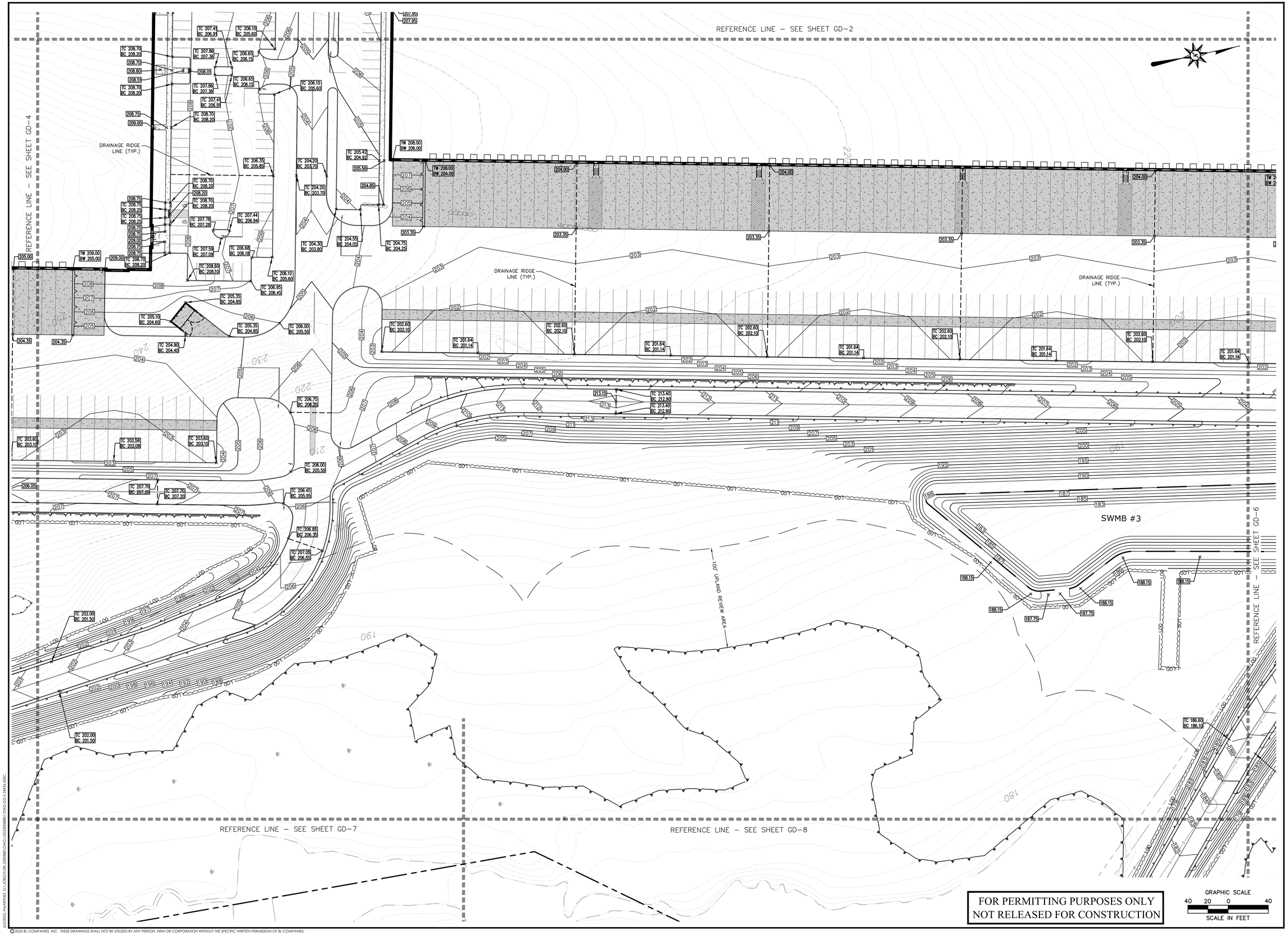

FOR PERMITTING PURPOSES ONLY
NOT RELEASED FOR CONSTRUCTION

BL Companies
Architecture
Engineering
Environmental
Land Surveying

100 Constitution Plaza
10th Floor
Hartford, CT 06103
(860) 249-2200

STATE OF CONNECTICUT
TIMOTHY A. HOULE
LICENSED
PROFESSIONAL ENGINEER

PROPOSED MANUFACTURING / INDUSTRIAL DEVELOPMENT

50-58 RAINBOW ROAD
EAST GRANBY, CONNECTICUT 06026

REVISIONS

No.	Date	Desc.

Designed	P.G.M.
Drawn	P.G.M.
Reviewed	T.A.H.
Scale	1"=40'
Project No.	2300888
Date	06/03/2025
CAD File: GD230088801	

Title

GRADING PLAN

Sheet No.

GD-5

Xref (s): BD230088801 : XC230088801 : XC230088802 : XC230088803 : 2024-2832 HWY : 0518-101 Preliminary

6/2/2025, PMARTINEZ, G:\JOBS23\08\2300888\DWG\GD230088801.DWG,GD-5 24X36 40SC.

© 2025 BL COMPANIES, INC. THESE DRAWINGS SHALL NOT BE UTILIZED BY ANY PERSON, FIRM OR CORPORATION WITHOUT THE SPECIFIC WRITTEN PERMISSION OF BL COMPANIES.

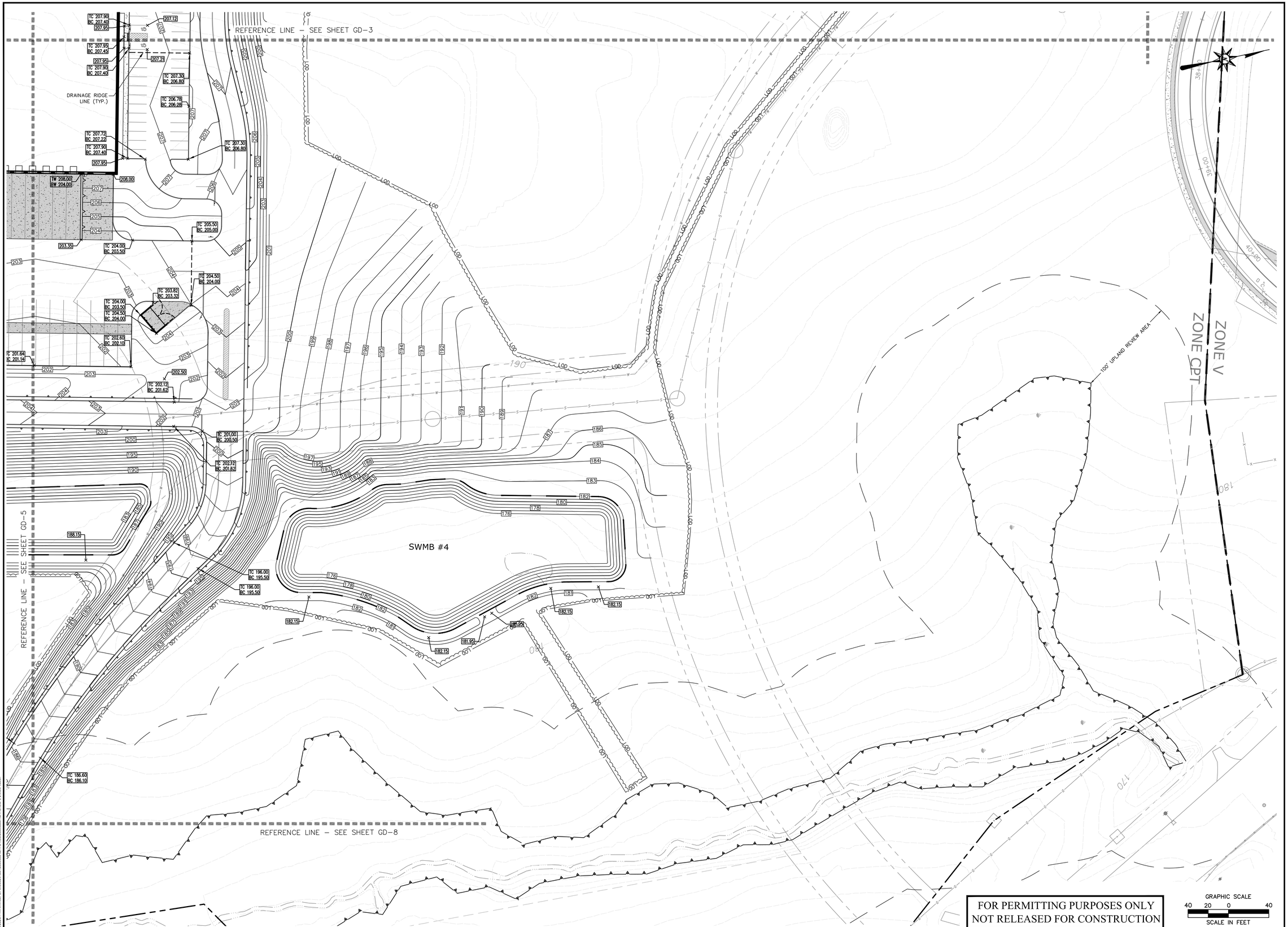

FOR PERMITTING PURPOSES ONLY
NOT RELEASED FOR CONSTRUCTION

GRAPHIC SCALE
40 20 0 40
SCALE IN FEET

© 2025 BL COMPANIES, INC. THESE DRAWINGS SHALL NOT BE UTILIZED BY ANY PERSON, FIRM OR CORPORATION WITHOUT THE SPECIFIC WRITTEN PERMISSION OF BL COMPANIES.

Architecture
Engineering
Environmental
Land Surveying

BL Companies

100 Constitution Plaza
10th Floor
Hartford, CT 06103
(860) 249-2200

STATE OF CONNECTION
TIMOTHY A. VOLZ
21117
LICENSED
PROFESSIONAL ENGINEER

PROPOSED MANUFACTURING / INDUSTRIAL DEVELOPMENT

50-58 RAINBOW ROAD
EAST GRANBY, CONNECTICUT 06026

REVISIONS		
No.	Date	Desc.

Designed	P.G.M.
Drawn	P.G.M.
Reviewed	T.A.H.
Scale	1"=40'
Project No.	2300888
Date	06/03/2025
CAD File: GD2300888801	

Title

GRADING PLAN

Sheet No.

GD-6

Xref (s) : BD2300888801 ; XZ2300888801 ; XC2300888801 ; XC2300888802 ; 2024-2832-HWY-1518-101 Preliminary

4/2/2025, PMARTINEZ, C:\CIVIL\DWG\BD\2300888\DWG\GD2300888801.DWG, GD-1 24X36 ARC

REFERENCE LINE – SEE SHEET GD-5

REFERENCE LINE – SEE SHEET GD-6

REFERENCE LINE – SEE SHEET GD-9

SWMB #5

100' UPLAND REVIEW AREA

TC 198.00
BC 197.50

TC 198.50
BC 198.00

TC 202.00
BC 201.50

190.15

189.55

TW 184.00
BW 183.40

TW 186.00
BW 183.36

TW 186.00
BW 183.36

TW 184.00
BW 183.35

TW 184.00
BW 183.65

TW 186.00
BW 183.57

TW 186.00
BW 183.57

TW 184.00
BW 183.65

TC 187.65
BC 187.15

TC 187.65
BC 187.15

MEX TC 198.50
MEX BC 198.00

MEX 197.20

MEX TC 197.25
MEX BC 196.75

15" RCP Flared End
Inv=184.02

Ex. Catchbasin
(Typ.)

Ex. Catchbasin
(Typ.)

Ex. Catchbasin
(Typ.)

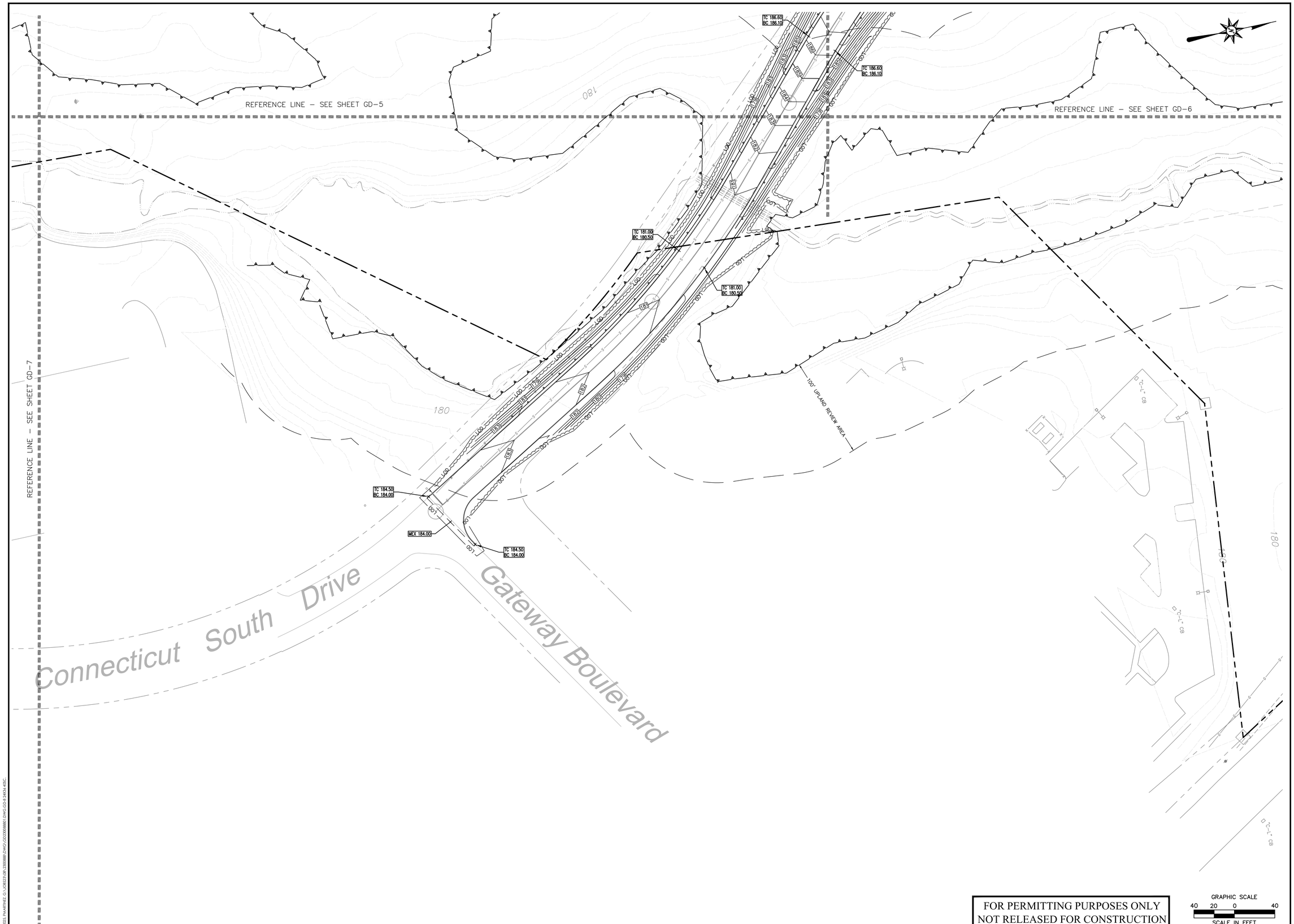

FOR PERMITTING PURPOSES ONLY
NOT RELEASED FOR CONSTRUCTION

Architecture
Engineering
Environmental
Land Surveying
BL Companies

100 Constitution Plaza
10th Floor
Hartford, CT 06103
(860) 249-2200

STATE OF CONNECTICUT
TIMOTHY A. HOULE
LICENSED
PROFESSIONAL ENGINEER

PROPOSED MANUFACTURING / INDUSTRIAL DEVELOPMENT

50-58 RAINBOW ROAD
EAST GRANBY, CONNECTICUT 06026

REVISIONS

No.	Date	Desc.

Designed	P.G.M.
Drawn	P.G.M.
Reviewed	T.A.H.
Scale	1"=40'
Project No.	2300888
Date	06/03/2025
CAD File: GD230088801	

Title

GRADING PLAN

Sheet No.

GD-8

Xref (s): : BD230088801 : XC230088801 : XC230088802 : XC230088803 : 2024-2832 HWY : 0518-101 Preliminary

6/2/2025 PMARTINEZ G:\JOBS23\08\2300888\DWG\GD230088801.DWG GD-8 24X36 40SC

© 2025 BL COMPANIES, INC. THESE DRAWINGS SHALL NOT BE UTILIZED BY ANY PERSON, FIRM OR CORPORATION WITHOUT THE SPECIFIC WRITTEN PERMISSION OF BL COMPANIES.

GRADING AND DRAINAGE LEGEND

	PROPERTY LINE
LOD	LIMIT OF DISTURBANCE/CONTRACT LIMIT LINE
	EXISTING WETLAND
	100' UPLAND REVIEW AREA
	ZONING BOUNDARY
	SAWCUT LINE
	PROVIDE AND INSTALL STORM LINE
	PROVIDE AND INSTALL TYPE C CATCH BASIN
	PROVIDE AND INSTALL TYPE C-L CATCH BASIN
	PROVIDE AND INSTALL DRAINAGE MANHOLE OR OUTLET CONTROL STRUCTURE
	PROVIDE AND INSTALL FLARED END SECTION
	PROPOSED CONTOUR LINE (2' INTERVAL)
60	EXISTING CONTOUR LINE (2' INTERVAL)
	PROPOSED SPOT GRADE

SPOT GRADE ABBREVIATIONS

BC	BOTTOM OF CURB
TC	TOP OF CURB
BW	BOTTOM OF WALL
TW	TOP OF WALL
MEX	MEET EXISTING CONDITION

NOTE: ALL NEW CATCH BASINS SHALL BE PROVIDED WITH 4' DEEP SUMPS AND HOODED OUTLETS

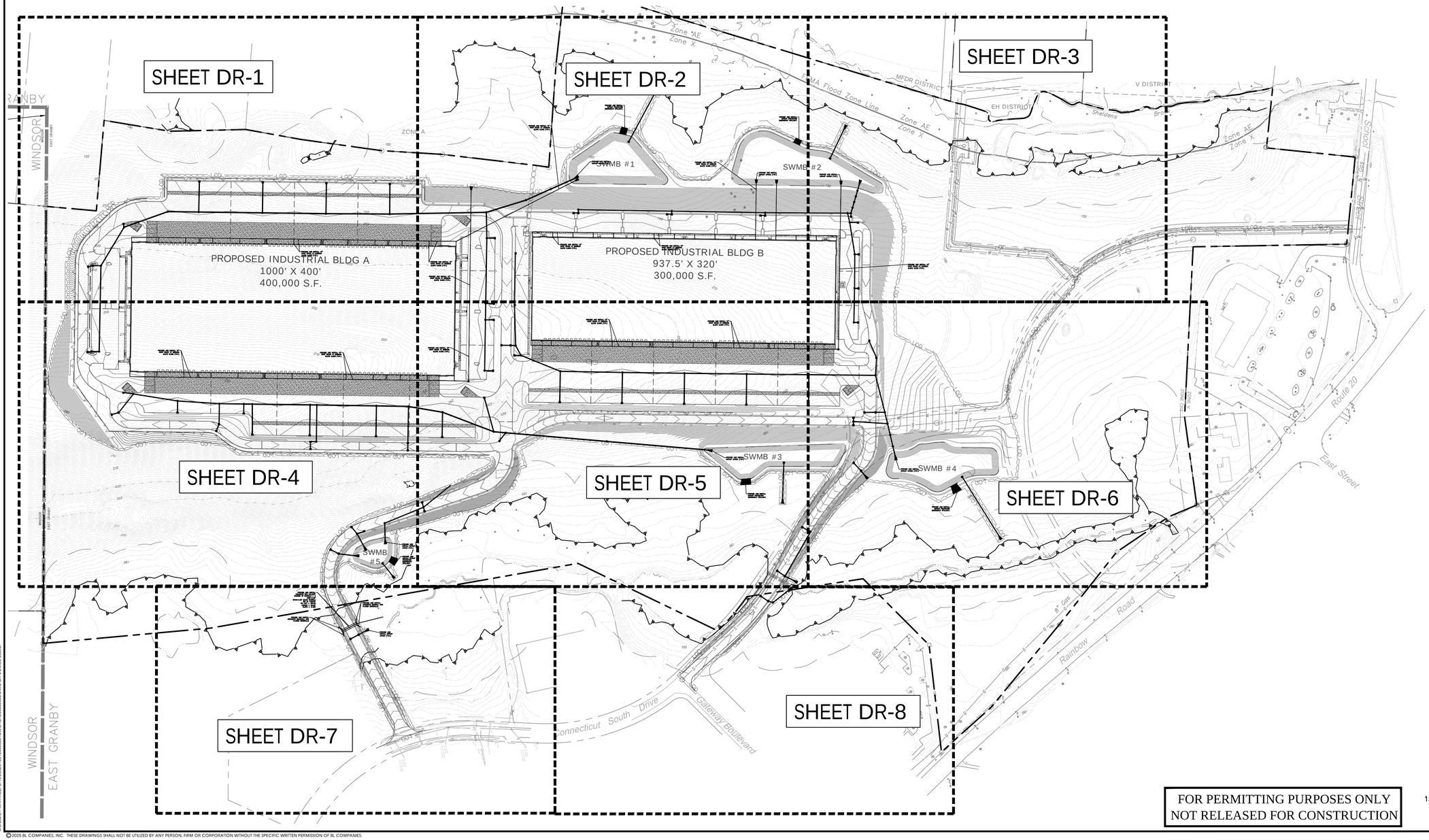

FOR PERMITTING PURPOSES ONLY
NOT RELEASED FOR CONSTRUCTION

GRAPHIC SCALE
150 75 0 150
SCALE IN FEET

© 2025 BL COMPANIES, INC. THESE DRAWINGS SHALL NOT BE UTILIZED BY ANY PERSON, FIRM OR CORPORATION WITHOUT THE SPECIFIC WRITTEN PERMISSION OF BL COMPANIES.

Architecture
Engineering
Environmental
Land Surveying

BL Companies

100 Constitution Plaza
10th Floor
Hartford, CT 06103
(860) 249-2200

STATE OF CONNECTICUT
TIMOTHY A. HOYT
26117
LICENSED PROFESSIONAL ENGINEER

PROPOSED MANUFACTURING / INDUSTRIAL DEVELOPMENT
50-58 RAINBOW ROAD
EAST GRANBY, CONNECTICUT 06026

REVISIONS

No.	Date	Desc.

Designed	P.G.M.
Drawn	P.G.M.
Reviewed	T.A.H.
Scale	1"=150'
Project No.	2300888
Date	06/03/2025
CAD File: DR230088801	

Title
OVERALL DRAINAGE PLAN

Sheet No.
DR-0

Xref 03 - I:\2023\02300888\01 XC\230088801 XC230088802 XC230088803 XC230088804 XC230088805 XC230088806 XC230088807 XC230088808 XC230088809 XC230088810 XC230088811 XC230088812 XC230088813 XC230088814 XC230088815 XC230088816 XC230088817 XC230088818 XC230088819 XC230088820 XC230088821 XC230088822 XC230088823 XC230088824 XC230088825 XC230088826 XC230088827 XC230088828 XC230088829 XC230088830 XC230088831 XC230088832 XC230088833 XC230088834 XC230088835 XC230088836 XC230088837 XC230088838 XC230088839 XC230088840 XC230088841

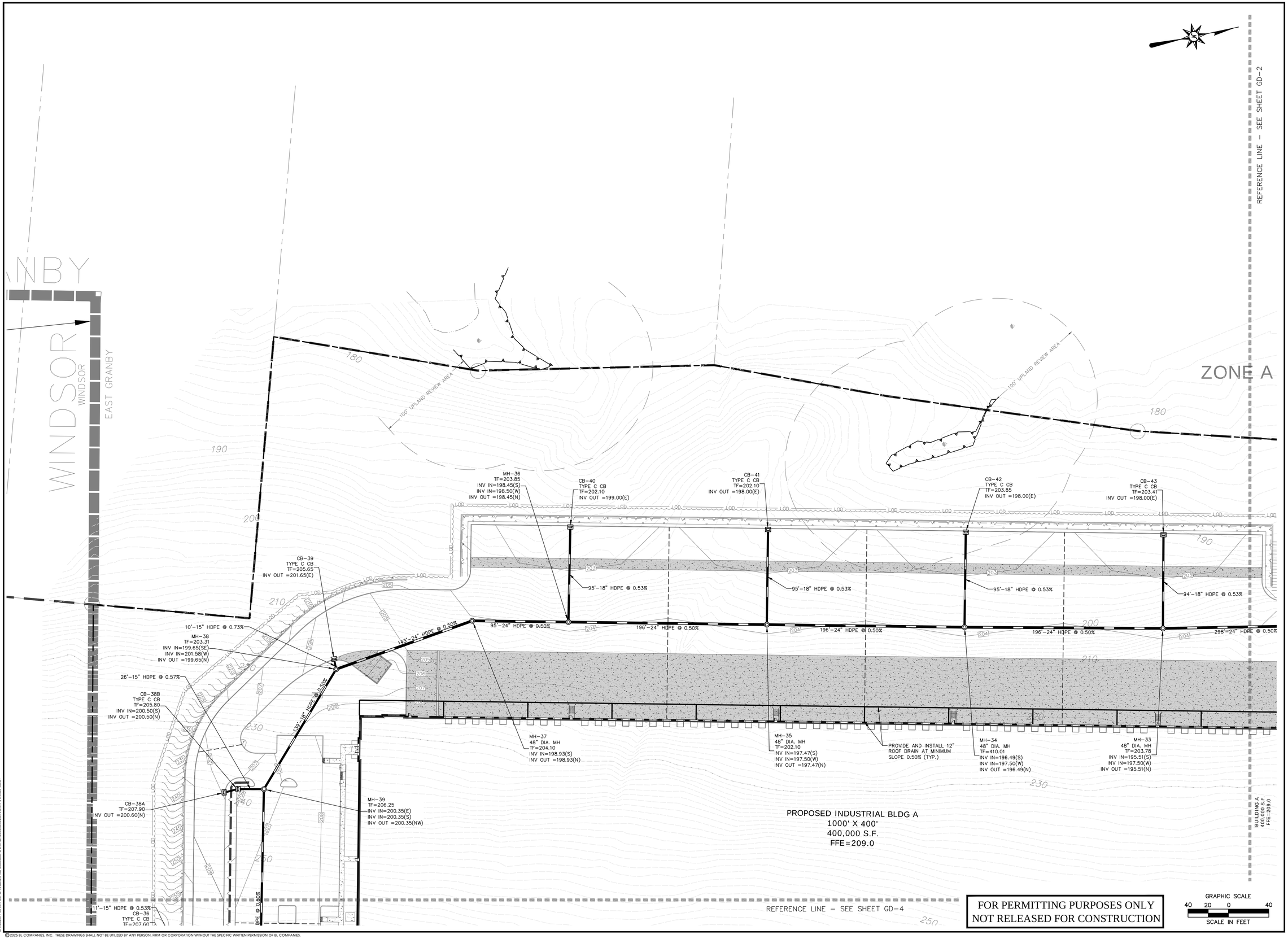

FOR PERMITTING PURPOSES ONLY
NOT RELEASED FOR CONSTRUCTION

© 2025 BL COMPANIES, INC. THESE DRAWINGS SHALL NOT BE UTILIZED BY ANY PERSON, FIRM OR CORPORATION WITHOUT THE SPECIFIC WRITTEN PERMISSION OF BL COMPANIES.

Architecture
Engineering
Environmental
Land Surveying

BL Companies

100 Constitution Plaza
10th Floor
Hartford, CT 06103
(860) 249-2200

STATE OF CONNECTICUT
TIMOTHY A. HOULE
38117
LICENSED
PROFESSIONAL ENGINEER

PROPOSED MANUFACTURING / INDUSTRIAL DEVELOPMENT

50-58 RAINBOW ROAD
EAST GRANBY, CONNECTICUT 06026

REVISIONS

No.	Date	Desc.

Designed	P.G.M.
Drawn	P.G.M.
Reviewed	T.A.H.
Scale	1"=40'
Project No.	2300888
Date	06/03/2025
CAD File:	DR230088801

Title

DRAINAGE PLAN

Sheet No.

DR-1

REFERENCE LINE – SEE SHEET GD–1

REFERENCE LINE – SEE SHEET GD–3

REFERENCE LINE – SEE SHEET GD–5

Zone AE

Zone X

100' UPLAND REVIEW AREA

100' UPLAND REVIEW AREA

100' UPLAND REVIEW AREA

FEMA

FES–12
INV OUT=172.00(SE)

PROVIDE AND INSTALL
RIPRAP PROTECTED
EMERGENCY SPILLWAY.

126'–15" HDPE @ 0.56%

OCS–1
TF=180.55
12" DIAM. ORIFICE =176.35
INV OUT =173.00(NW)

PROVIDE AND INSTALL 12"
ROOF DRAIN AT MINIMUM
SLOPE 0.50% (TYP.)

MH–26
TF=186.75
INV IN=182.20(S)
INV OUT =180.25(N)

78'–24" HDPE @ 5.02%

128'–24" HDPE @ 2.98%

83'–24" HDPE @ 4.99%

MH–27
TF=196.00
INV IN=190.20(S)
INV OUT =186.35(N)

SWMB #1

PROVIDE AND INSTALL
RIPRAP APRON (TYP.)

FES–6
INV IN=176.35(S)

MH–28
TYPE C CB
TF=206.90
INV IN=194.02(S)
INV IN=198.42(E)
INV OUT =194.02(N)

80'–18" HDPE @ 0.50%

288'–15" HDPE @ 0.50%

PROVIDE AND INSTALL
RIPRAP PROTECTED
EMERGENCY SPILLWAY.

PROVIDE AND INSTALL 12"
ROOF DRAIN AT MINIMUM
SLOPE 0.50% (TYP.)

SWMB #2

254'–15" HDPE @ 0.50%

PROVIDE AND INSTALL
RIPRAP APRON (TYP.)

288'–15" HDPE @ 0.50%

0.53%

–24" HDPE @ 0.50%

MH–29
TF=206.36
INV IN=198.82(E)
INV IN=200.86(N)
INV OUT =198.82(W)

PROVIDE AND INSTALL 12"
ROOF DRAIN AT MINIMUM
SLOPE 0.50% (TYP.)

PROVIDE AND INSTALL 12"
ROOF DRAIN AT MINIMUM
SLOPE 0.50% (TYP.)

CB–35
TYPE C CB
TF=205.60
INV OUT =201.00(S)

25'–15" HDPE @ 0.55%

CB–11A
TF=206.30
INV OUT =202.80(E)

159'–15" HDPE @ 0.50%

26'–15" HDPE @ 0.53%

MH–30
TF=206.36
INV IN=199.82(E)
INV IN=200.86(N)
INV OUT =199.82(W)

CB–34
TYPE C CB
TF=205.60
INV OUT =201.00(S)

CB–11B
TYPE C CB
TF=206.10
INV IN=202.00(W)
INV OUT =202.00(E)

PROVIDE AND INSTALL 12"
ROOF DRAIN AT MINIMUM
SLOPE 0.50% (TYP.)

MH–25
TF=205.00
INV IN=201.15(E)
INV OUT =201.15(N)

10'–15" HDPE @ 0.71%

CB–27
TYPE C CB
TF=205.36
INV IN=201.22(S)
INV OUT =201.22(W)

14'–15" HDPE @ 0.56%

CB–26
TYPE C CB
TF=205.36
INV OUT =201.30(N)

PROVIDE AND INSTALL 12"
ROOF DRAIN AT MINIMUM
SLOPE 0.50% (TYP.)

MH–24
TF=205.10
INV IN=199.71(S)
INV IN=201.15(E)
INV OUT =199.71(N)

9'–15" HDPE @ 0.76%

CB–29
TYPE C CB
TF=205.36
INV IN=201.22(S)
INV OUT =201.22(W)

14'–15" HDPE @ 0.56%

CB–28
TYPE C CB
TF=205.36
INV OUT =201.30(N)

CB–30
TYPE C CB
TF=205.37
INV OUT =201.30(N)

CB–31
TYPE C CB
TF=205.37
INV IN=201.22(S)
INV OUT =201.22(W)

MH–23
TF=205.25
INV IN=198.27(S)
INV IN=201.15(E)
INV OUT =198.27(N)

8'–15" HDPE @ 0.87%

INV I
INV I
INV OUT

BUILDING A
400,000 S.F.
FFE=209.0

BUILDING B
300,000 S.F.
FFE=208.0

PROPOSED INDUSTRIAL BLDG B
937.5' X 320'
300,000 S.F.
FFE=208.0

FOR PERMITTING PURPOSES ONLY
NOT RELEASED FOR CONSTRUCTION

GRAPHIC SCALE
40 20 0 40
SCALE IN FEET

Architecture
Engineering
Environmental
Land Surveying

BL Companies

100 Constitution Plaza
10th Floor
Hartford, CT 06103
(860) 249-2200

STATE OF CONNECTICUT
TIMOTHY A. HOLLY
3817
LICENSED
PROFESSIONAL ENGINEER

PROPOSED MANUFACTURING / INDUSTRIAL DEVELOPMENT

50-58 RAINBOW ROAD
EAST GRANBY, CONNECTICUT 06026

REVISIONS

No.	Date	Desc.

Designed	P.G.M.
Drawn	P.G.M.
Reviewed	T.A.H.
Scale	1"=40'
Project No.	2300888
Date	06/03/2025
CAD File: DR230088801	

Title

DRAINAGE PLAN

Sheet No.

DR-2

Xref (s) - B0230088801_XC230088801_XZ230088801_XC230088802_XC230088803

© 2025 BL COMPANIES, INC. THESE DRAWINGS SHALL NOT BE UTILIZED BY ANY PERSON, FIRM OR CORPORATION WITHOUT THE SPECIFIC WRITTEN PERMISSION OF BL COMPANIES.

6/3/2025, TMARTINEL, C:\1-WORKSITE\100-2300888\100-DWG\230088801.DWG, DR-2 24X36 ARCH

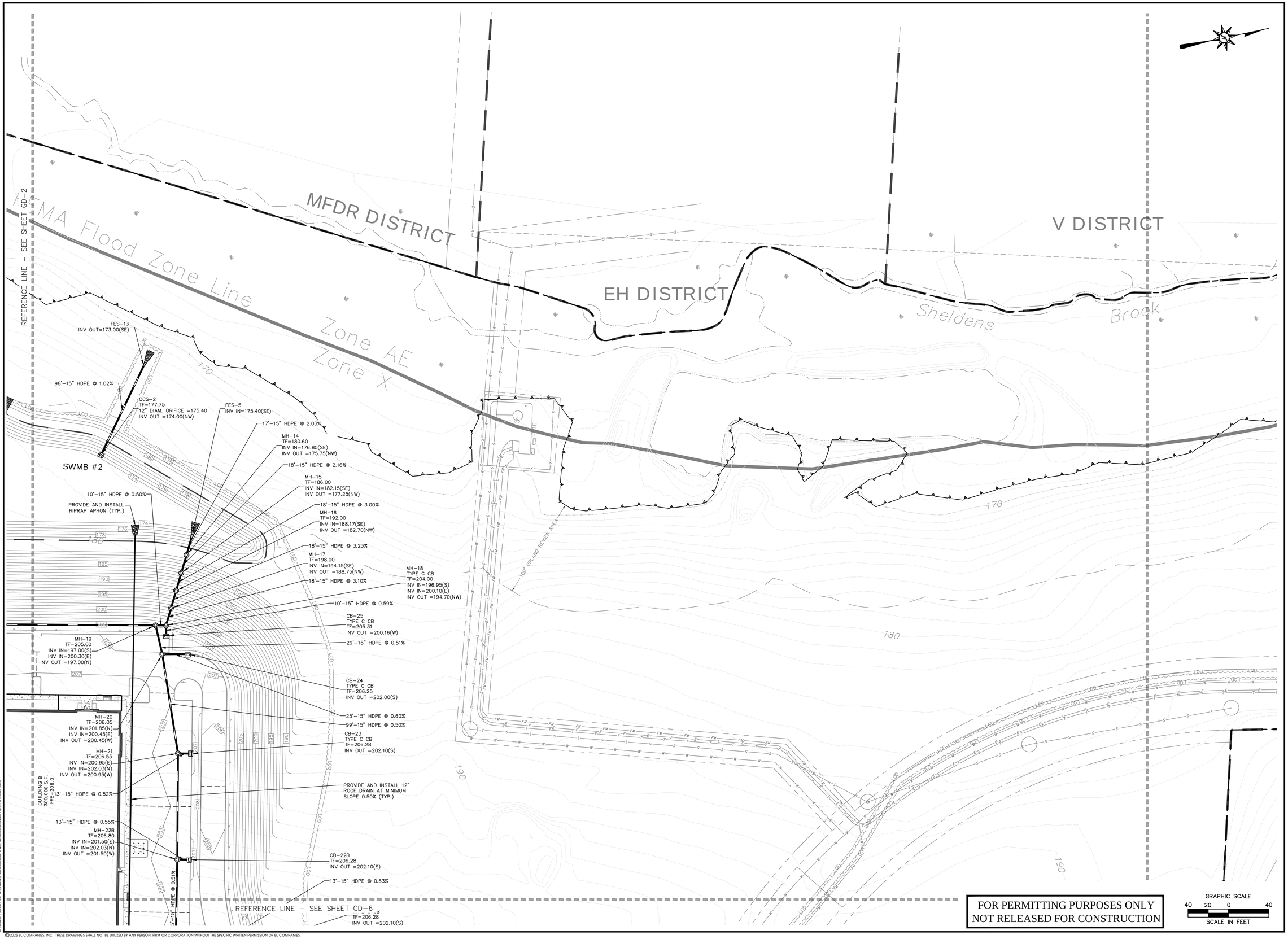

Architecture
Engineering
Environmental
Land Surveying

BL Companies

100 Constitution Plaza
10th Floor
Hartford, CT 06103
(860) 249-2200

STATE OF CONNECTICUT
TIMOTHY A. HOYT
38117
LICENSED PROFESSIONAL ENGINEER

PROPOSED MANUFACTURING / INDUSTRIAL DEVELOPMENT

50-58 RAINBOW ROAD
EAST GRANBY, CONNECTICUT 06026

REVISIONS

No.	Date	Desc.

Designed	P.G.M.
Drawn	P.G.M.
Reviewed	T.A.H.
Scale	1"=40'
Project No.	2300888
Date	06/03/2025
CAD File: DR230088801	

Title

DRAINAGE PLAN

Sheet No.

DR-3

Xref ID: B023008880I1 ; XC2300888I01 ; XC2300888I02 ; XC2300888I03

E:\230\05_PHARTFORD_EL-1.5\DR23\01\00\2300888\01\DWG\DR230088801.DWG 06-3-24X36 ARCH

©2025 BL COMPANIES, INC. THESE DRAWINGS SHALL NOT BE UTILIZED BY ANY PERSON, FIRM OR CORPORATION WITHOUT THE SPECIFIC WRITTEN PERMISSION OF BL COMPANIES.

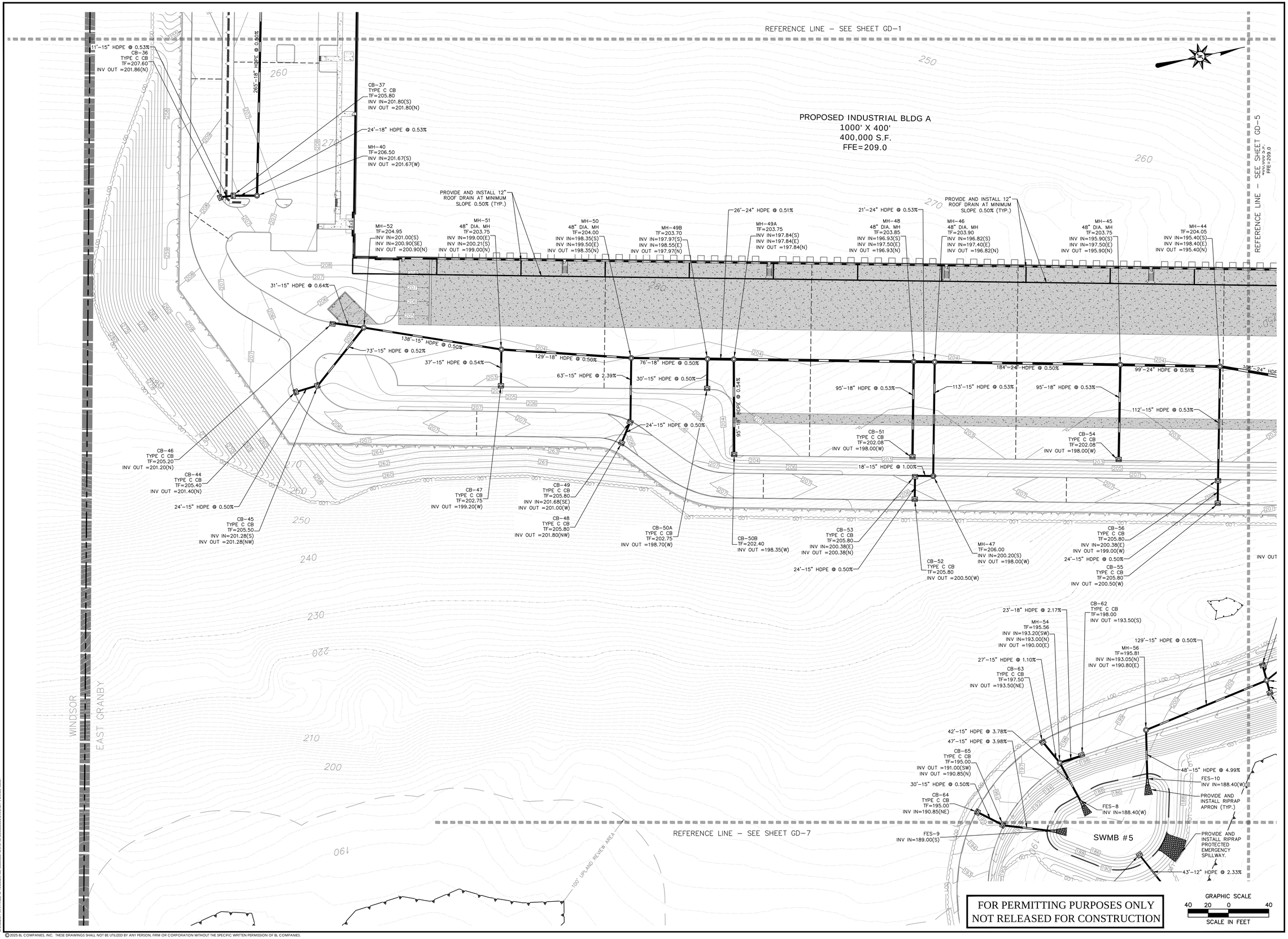

Architecture
Engineering
Environmental
Land Surveying

BL Companies

100 Constitution Plaza
10th Floor
Hartford, CT 06103
(860) 249-2200

STATE OF CONNECTICUT
TIMOTHY A. HOLE
3811
LICENSED PROFESSIONAL ENGINEER

PROPOSED MANUFACTURING / INDUSTRIAL DEVELOPMENT

50-58 RAINBOW ROAD
EAST GRANBY, CONNECTICUT 06026

REVISIONS

No.	Date	Desc.

Designed	P.G.M.
Drawn	P.G.M.
Reviewed	T.A.H.
Scale	1"=40'
Project No.	2300888
Date	06/03/2025
CAD File: DR230088801	

Title

DRAINAGE PLAN

Sheet No.

DR-4

Xref (s) : BD230088801, X230088801, XC230088801, XC230088802, XC230088803

© 2025 BL COMPANIES, INC. THESE DRAWINGS SHALL NOT BE UTILIZED BY ANY PERSON, FIRM OR CORPORATION WITHOUT THE SPECIFIC WRITTEN PERMISSION OF BL COMPANIES.

6/3/2025, PAKAITNIS, G:\2300\23\88\2300888 DWG\DR\2300888 DWG\DR-4.DWG, DR-4 24X36 ARCH

REFERENCE LINE – SEE SHEET GD-2

REFERENCE LINE – SEE SHEET GD-4

REFERENCE LINE – SEE SHEET GD-6

REFERENCE LINE – SEE SHEET GD-7

REFERENCE LINE – SEE SHEET GD-8

BUILDING A
400,000 S.F.
FFE=209.0

BUILDING B
300,000 S.F.
FFE=208.0

PROPOSED INDUSTRIAL BLDG B
937.5' X 320'
300,000 S.F.
FFE=208.0

26'–15" HDPE @ 0.53%

MH–30
TF=206.36
INV IN=199.82(E)
INV IN=200.86(N)
INV OUT =199.82(W)

CB–33
TYPE C CB
TF=205.60
INV OUT =201.00(S)

MH–31
TF=206.36
INV IN=200.08(E)
INV IN=200.86(N)
INV OUT =200.08(W)

26'–15" HDPE @ 0.53%

CB–12
TYPE C CB
TF=203.70
INV OUT =199.50(N)

PROVIDE AND INSTALL 12"
ROOF DRAIN AT MINIMUM
SLOPE 0.50% (TYP.)

27'–15" HDPE @ 0.52%

MH–32
TF=206.36
INV IN=200.86(N)
INV OUT =200.86(W)

156'–15" HDPE @ 0.50%

CB–34
TYPE C CB
TF=205.60
INV OUT =201.00(S)

CB–11B
TYPE C CB
TF=206.10
INV IN=202.00(W)
INV OUT =202.00(E)
125'–15" HDPE @ 1.52%

CB–13
TYPE C CB
TF=203.70
INV IN=199.35(S)
INV OUT =199.35(N)

15'–15" HDPE @ 0.54%

MH–13
TF=204.20
INV IN=199.10(E)
INV IN=200.10(W)
INV IN=199.27(S)

34'–15" HDPE @ 0.50%

MH–12
TF=201.05
INV IN=199.35(S)
INV OUT =199.27(W)
INV OUT =199.10(NE)

PROVIDE AND INSTALL 12"
ROOF DRAIN AT MINIMUM
SLOPE 0.50% (TYP.)

MH–11
48" DIA. MH
TF=202.85
INV IN=198.50(E)
INV IN=198.44(SW)
INV OUT =198.44(N)

131'–15" HDPE @ 0.50%

CB–14
TYPE C CB
TF=203.80
INV OUT =199.50(N)

CB–32
TYPE C CB
TF=205.60
INV OUT =201.00(S)

96'–18" HDPE @ 0.52%

192'–18" HDPE @ 0.50%

MH–10
48" DIA. MH
TF=202.85
INV IN=197.48(S)
INV IN=197.50(E)
INV OUT =197.48(N)

95'–18" HDPE @ 0.53%

CB–16
TYPE C CB
TF=201.14
INV OUT =198.00(W)

191'–18" HDPE @ 0.50%

MH–9
TF=202.85
INV IN=196.52(S)
INV IN=197.50(E)
INV OUT =196.52(N)

PROVIDE AND INSTALL 12"
ROOF DRAIN AT MINIMUM
SLOPE 0.50% (TYP.)

191'–18" HDPE @ 0.50%

MH–8
48" DIA. MH
TF=202.85
INV IN=197.50(E)
INV IN=195.56(S)
INV OUT =195.56(N)

95'–18" HDPE @ 0.53%

CB–18
TYPE C CB
TF=201.14
INV OUT =198.00(W)

192'–18" HDPE @ 0.50%

MH
TF=
INV
INV
INV

96'–18" HDPE @ 0.52%

CB–19
TYPE C CB
TF=201.14
INV OUT =198.00(W)

CB–15
TYPE C CB
TF=201.14
INV OUT =199.00(W)

CB–17
TF=201.14
INV OUT =198.00(W)

CB–58
TYPE C CB
TF=205.00
INV OUT =200.75(E)

110'–18" HDPE @ 0.50%

106'–24" HDPE @ 0.50%

169'–24" HDPE @ 0.58%

78'–18" HDPE @ 0.52%

MH–42B
TF=206.20
INV IN=193.89(SW)
INV IN=200.20(W)
INV OUT =193.89(N)

MH–43
TF=203.50
INV IN=194.87(S)
INV IN=197.60(E)
INV OUT =194.87(NE)

312'–24" HDPE @ 1.07%

MH–42A
TF=205.80
INV IN=193.69(S)
INV IN=200.80(SE)
INV OUT =193.69(N)

CB–59
TF=205.50
INV OUT =201.00(NW)

310'–24" HDPE @ 1.07%

MH–41
TF=201.00
INV IN=190.33(S)
INV OUT =190.33(N)

CB–57
TYPE C CB
TF=202.08
INV OUT =198.00(W)

37'–24" HDPE @ 0.55%

CB–60
TYPE C CB
TF=201.50
INV OUT =197.60(E)

16'–15" HDPE @ 0.50%

YD–1
TF=1.55
INV OUT =194.25(SE)

106'–12" HDPE @ 0.52%

MH–53
TF=199.83
INV IN=197.52(W)
INV IN=193.70(NW)
INV OUT =197.52(E)
INV OUT =193.70(S)

14'–15" HDPE @ 0.50%

CB–61
TYPE C CB
TF=201.50
INV IN=197.45(W)

4.99%

88.40(W)

AND
RIPRAP
TYP.)

AND
RIPRAP
ED
ICY
Y.

2.33%

100' UPLAND REVIEW AREA

PROVIDE AND INSTALL
RIPRAP APRON (TYP.)

FES–7
INV IN=187.00(S)

SWMB #3

OCS–3
TF=187.75
12" DIAM. ORIFICE =185.00
INV OUT =184.00(E)

INV
15'–15

110'–12" HDPE @ 0.55%

PROVIDE AND INSTALL
RIPRAP PROTECTED
EMERGENCY SPILLWAY.

FES–14
INV OUT=183.40(W)

CB–5
TYPE C CB
TF=186.10
INV OUT =181.85(NE)

158'–15" HDPE @ 2.00%

CB–3
TYPE C CB
TF=181.00
INV OUT =176.75(NE)

30'–15" HDPE @ 0.50%

FOR PERMITTING PURPOSES ONLY
NOT RELEASED FOR CONSTRUCTION

GRAPHIC SCALE
40 20 0 40
SCALE IN FEET

©2025 BL COMPANIES, INC. THESE DRAWINGS SHALL NOT BE UTILIZED BY ANY PERSON, FIRM OR CORPORATION WITHOUT THE SPECIFIC WRITTEN PERMISSION OF BL COMPANIES.

Architecture
Engineering
Environmental
Land Surveying

BL Companies

100 Constitution Plaza
10th Floor
Hartford, CT 06103
(860) 249-2200

STATE OF CONNECTICUT
TIMOTHY A. HOLLY
3817
LICENSED
PROFESSIONAL ENGINEER

PROPOSED MANUFACTURING / INDUSTRIAL
DEVELOPMENT
50-58 RAINBOW ROAD
EAST GRANBY, CONNECTICUT 06026

REVISIONS
No. Date Desc.

Designed	P.G.M.
Drawn	P.G.M.
Reviewed	T.A.H.
Scale	1"=40'
Project No.	2300888
Date	06/03/2025
CAD File: DR230088801	

Title

DRAINAGE PLAN

Sheet No.

DR-5

Xref (s) : B0230088801_XC2300888801_XC2300888802_XC2300888803

G:\2025_PM\MTW\EL_CL\1925\21\00\230088801\DWG\DR230088801.DWG 08-5 24X36 ARCH

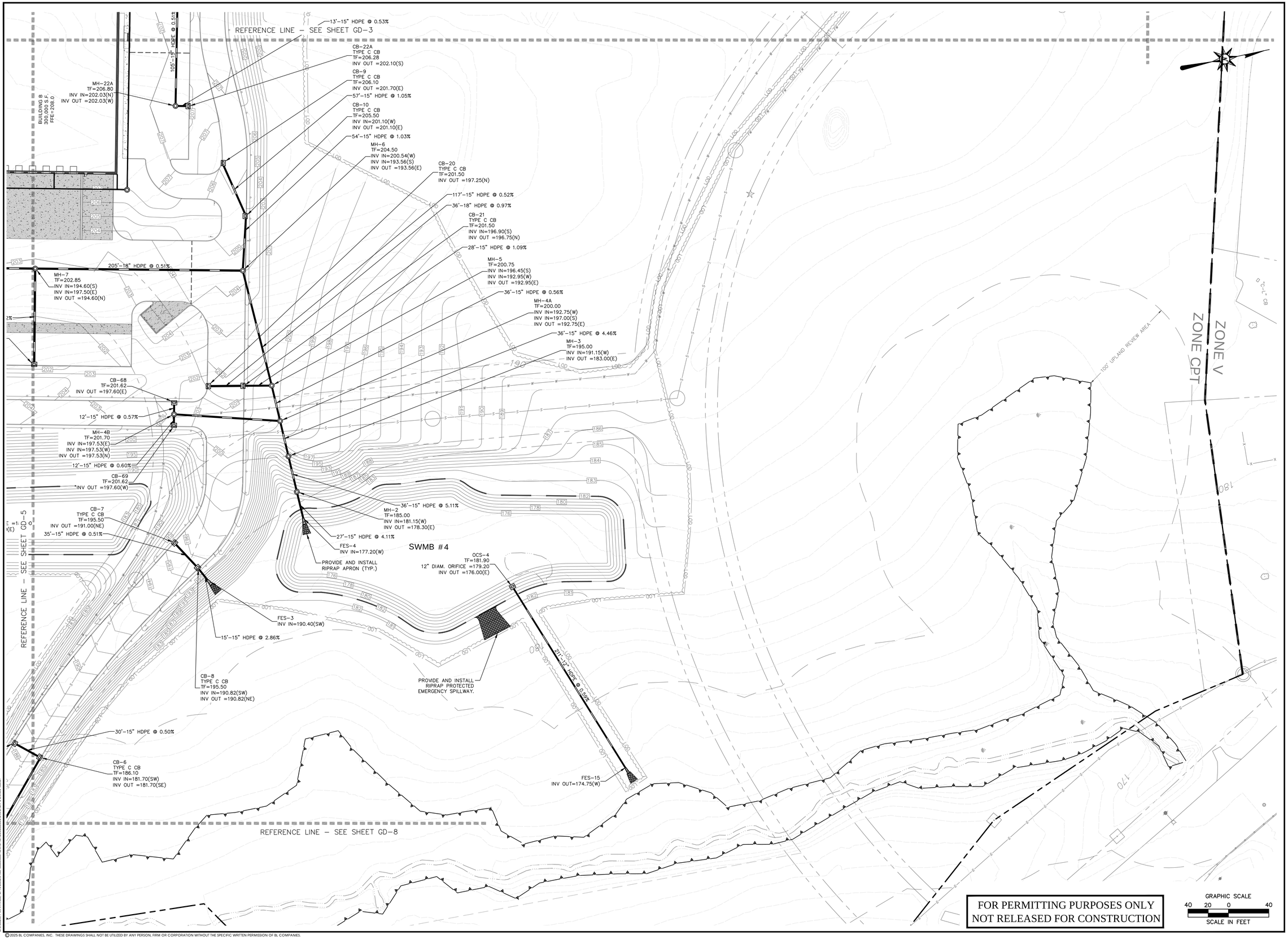

© 2025 BL COMPANIES, INC. THESE DRAWINGS SHALL NOT BE UTILIZED BY ANY PERSON, FIRM OR CORPORATION WITHOUT THE SPECIFIC WRITTEN PERMISSION OF BL COMPANIES.

Architecture
Engineering
Environmental
Land Surveying

BL Companies

100 Constitution Plaza
10th Floor
Hartford, CT 06103
(860) 249-2200

STATE OF CONNECTICUT
TIMOTHY A. HOLLEY
3817
LICENSED
PROFESSIONAL ENGINEER

PROPOSED MANUFACTURING / INDUSTRIAL DEVELOPMENT

50-58 RAINBOW ROAD
EAST GRANBY, CONNECTICUT 06026

REVISIONS

No.	Date	Desc.

Designed	P.G.M.
Drawn	P.G.M.
Reviewed	T.A.H.
Scale	1"=40'
Project No.	2300888
Date	06/03/2025
CAD File: DR230088801	

Title

DRAINAGE PLAN

Sheet No.

DR-6

Xref: 01 - BD230088801; XC230088801; XC230088802; XC230088803

6/3/2025, P:\AMATRIC, G:\JOBS\23\00\2300888\DWG\DR\2300888DWG.DWG, DR-6 ARCH ARCH

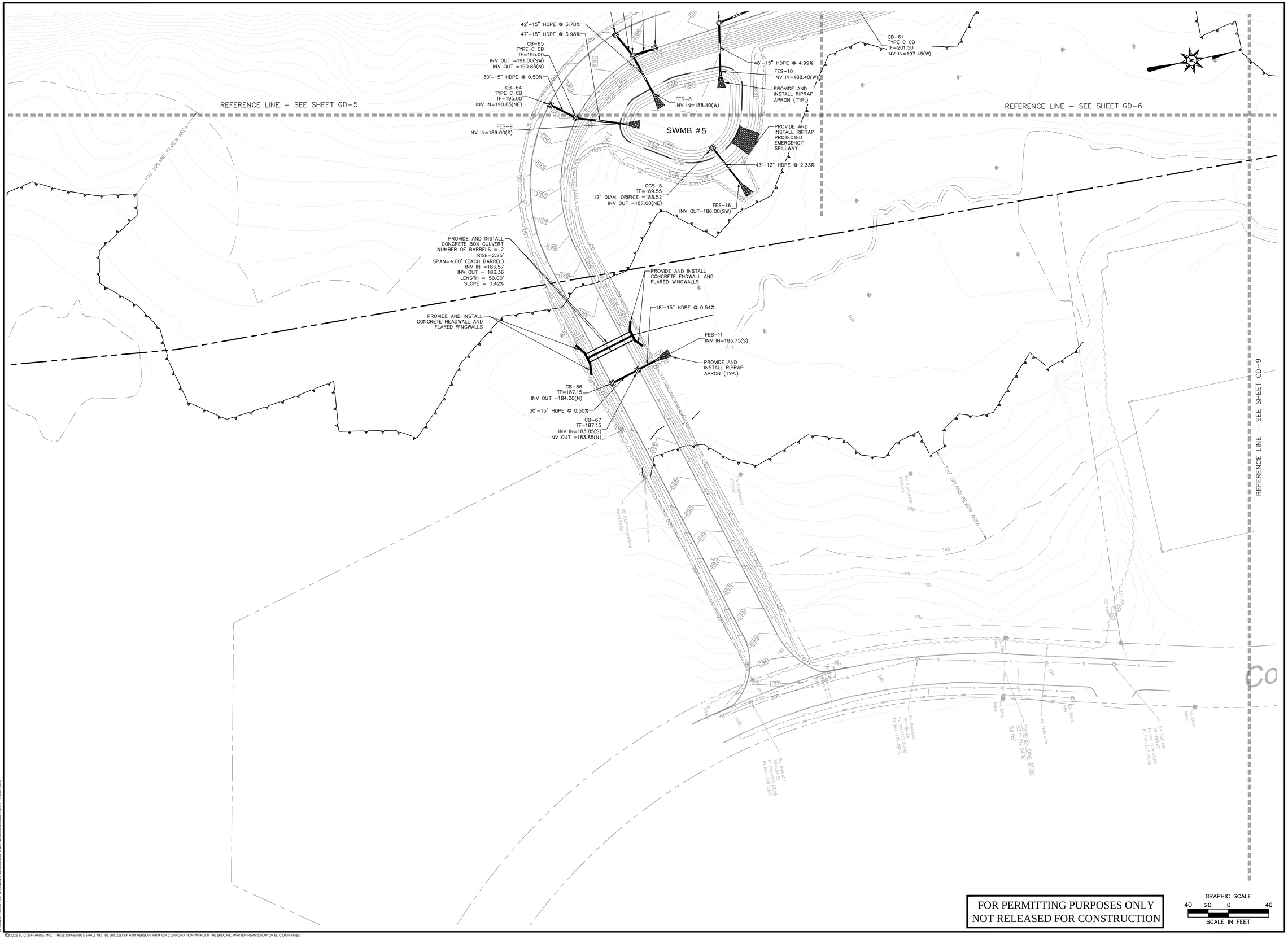

FOR PERMITTING PURPOSES ONLY
NOT RELEASED FOR CONSTRUCTION

GRAPHIC SCALE
40 20 0 40
SCALE IN FEET

© 2025 BL COMPANIES, INC. THESE DRAWINGS SHALL NOT BE UTILIZED BY ANY PERSON, FIRM OR CORPORATION WITHOUT THE SPECIFIC WRITTEN PERMISSION OF BL COMPANIES.

BL Companies
Architecture
Engineering
Environmental
Land Surveying

100 Constitution Plaza
10th Floor
Hartford, CT 06103
(860) 249-2200

STATE OF CONNECTICUT
TIMOTHY A. HOULE
38117
LICENSED
PROFESSIONAL ENGINEER

PROPOSED MANUFACTURING / INDUSTRIAL DEVELOPMENT

50-58 RAINBOW ROAD
EAST GRANBY, CONNECTICUT 06026

REVISIONS

No.	Date	Desc.

Designed	P.G.M.
Drawn	P.G.M.
Reviewed	T.A.H.
Scale	1"=40'
Project No.	2300888
Date	06/03/2025
CAD File:	DR230088801

Title

DRAINAGE PLAN

Sheet No.

DR-7

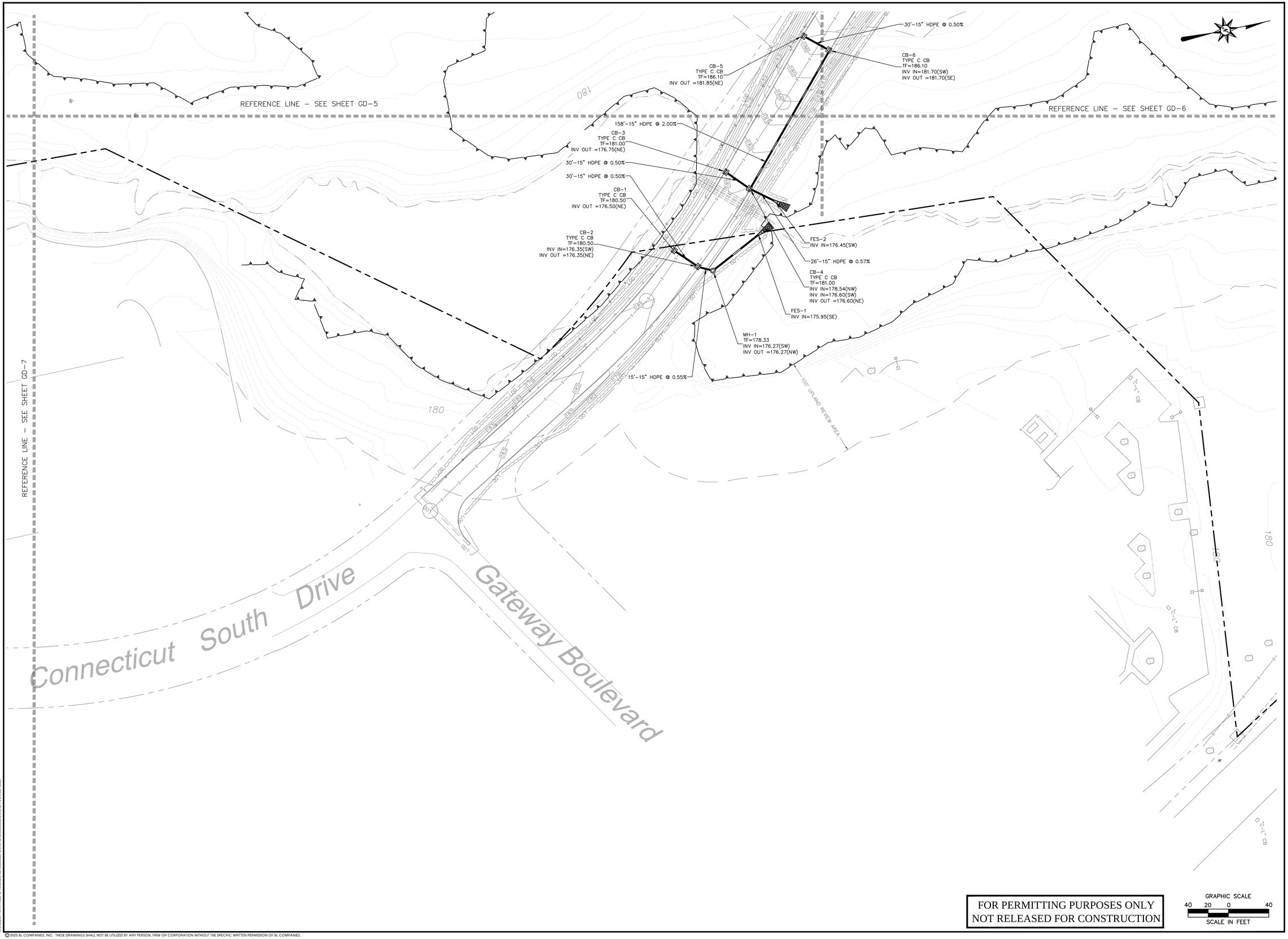

FOR PERMITTING PURPOSES ONLY
NOT RELEASED FOR CONSTRUCTION

GRAPHIC SCALE
40 20 0 40
SCALE IN FEET

Architecture
Engineering
Environmental
Land Surveying

BL Companies

100 Constitution Plaza
10th Floor
Hartford, CT 06103
(860) 249-2200

STATE OF CONNECTICUT
TIMOTHY A. HOULE
38117
LICENSED
PROFESSIONAL ENGINEER

PROPOSED MANUFACTURING / INDUSTRIAL DEVELOPMENT

50-58 RAINBOW ROAD
EAST GRANBY, CONNECTICUT 06026

REVISIONS

No.	Date	Desc.

Designed	P.G.M.
Drawn	P.G.M.
Reviewed	T.A.H.
Scale	1"=40'
Project No.	2300888
Date	06/03/2025
CAD File:	DR230088801

Title

DRAINAGE PLAN

Sheet No.

DR-8

Xref (s): BD230088801 ; XC230088801 ; XC230088802 ; XC230088803

6/3/2025, P.MARTINEZ, G:\JOBS23\08\2300888\DWG\DR230088801.DWG DR-8 24X36 40SC.

© 2025 BL COMPANIES, INC. THESE DRAWINGS SHALL NOT BE UTILIZED BY ANY PERSON, FIRM OR CORPORATION WITHOUT THE SPECIFIC WRITTEN PERMISSION OF BL COMPANIES.

SITE UTILITIES LEGEND

- PROPERTY LINE
- LOD — LIMIT OF DISTURBANCE/CONTRACT LIMIT LINE
- EXISTING WETLAND
- 100' UPLAND REVIEW AREA
- ZONING BOUNDARY
- SAWCUT LINE
- E — ELECTRIC LINE
- G — GAS LINE
- W — WATER LINE
- F — FIRE LINE
- S — SANITARY SEWER LINE
- T — TELECOMMUNICATIONS LINE
- ETC — ELECTRIC AND TELECOMMUNICATIONS LINE
- OH — OVERHEAD ELECTRIC LINE
- STORM LINE
- FIRE HYDRANT ASSEMBLY
- SANITARY SEWER MANHOLE
- GV — GATE VALVE

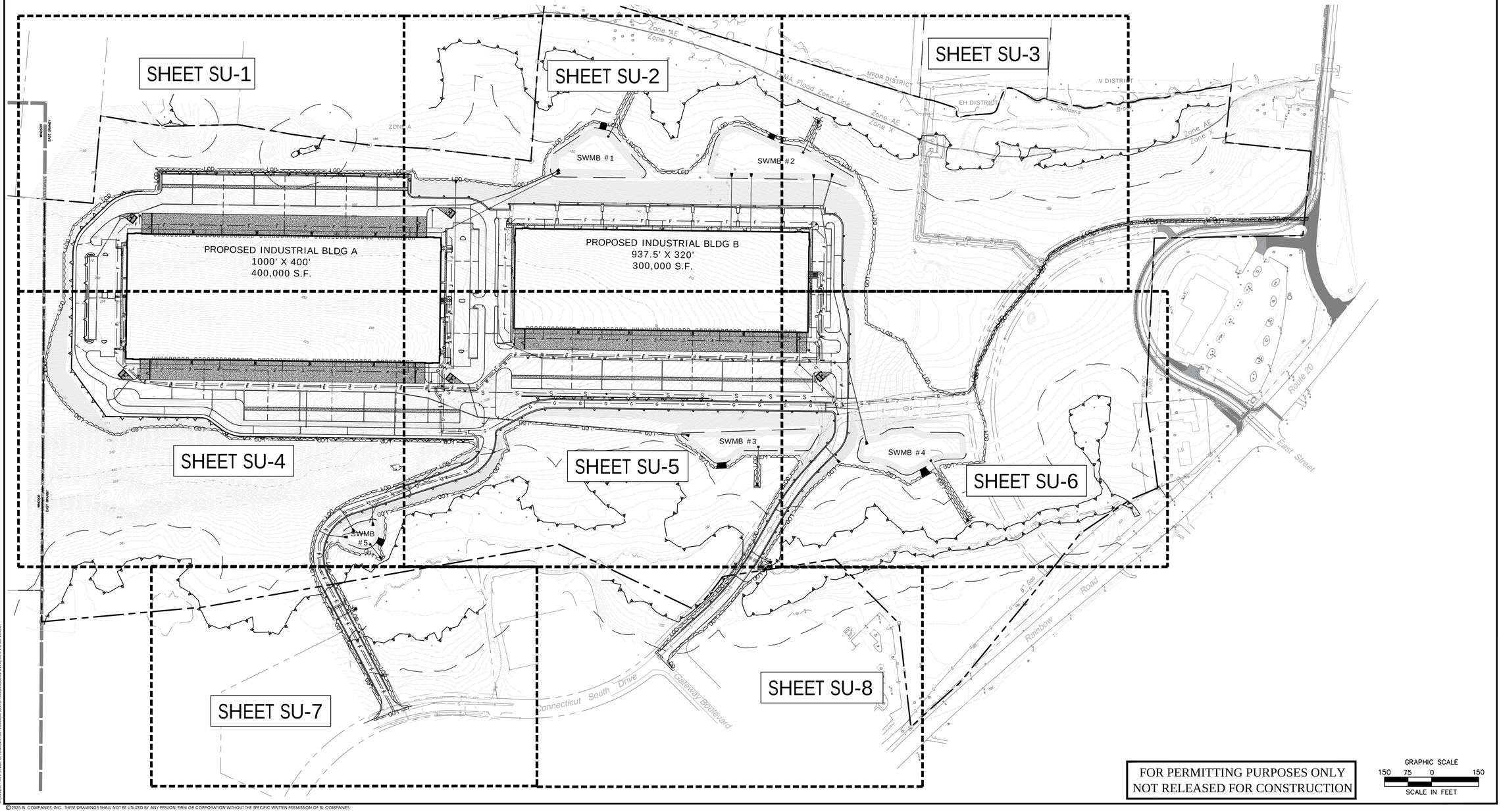

FOR PERMITTING PURPOSES ONLY
NOT RELEASED FOR CONSTRUCTION

GRAPHIC SCALE
150 75 0 150
SCALE IN FEET

© 2025 BL COMPANIES, INC. THESE DRAWINGS SHALL NOT BE UTILIZED BY ANY PERSON, FIRM OR CORPORATION WITHOUT THE SPECIFIC WRITTEN PERMISSION OF BL COMPANIES.

Architecture
Engineering
Environmental
Land Surveying

BL Companies

100 Constitution Plaza
10th Floor
Hartford, CT 06103
(860) 249-2200

STATE OF CONNECTICUT
TIMOTHY A. HOYT
26117
LICENSED
PROFESSIONAL ENGINEER

PROPOSED MANUFACTURING / INDUSTRIAL DEVELOPMENT
50-58 RAINBOW ROAD
EAST GRANBY, CONNECTICUT 06026

REVISIONS

No.	Date	Desc.

Designed	P.G.M.
Drawn	P.G.M.
Reviewed	T.A.H.
Scale	1"=150'
Project No.	2300888
Date	06/03/2025
CAD File: SU230088801	

Title

OVERALL SITE UTILITY PLAN

Sheet No.

SU-0

Xref 03 - I:\2023\02300888\01 XC\230088801 - XC230088801 - 2024-2832 HWY - 0518-101 Preliminary
Xref 02 - I:\2023\02300888\02 XC\230088802 - XC230088802 - 2024-2832 HWY - 0518-101 Preliminary
Xref 04 - I:\2023\02300888\04 XC\230088804 - XC230088804 - 2024-2832 HWY - 0518-101 Preliminary

I:\2025\...\SU230088801.DWG 3/4/2025 1:05:51 PM EDT

WINDSOR

EAST GRANBY

REFERENCE LINE – SEE SHEET SU-2

ZONE A

EXISTING WETLAND LIMITS (TYP.)

100' UPLAND REVIEW AREA

EXISTING WETLAND LIMITS (TYP.)

100' UPLAND REVIEW AREA

180

190

200

210

220

230

240

250

LOD

PROVIDE AND INSTALL FIRE HYDRANT ASSEMBLY, 6" D.I.P. HYDRANT LATERAL, GATE VALVE, AND BOX VALVE (TYP.)

PROVIDE AND INSTALL 45° BEND FITTING AND THRUST BLOCK (TYP.)

PROVIDE AND INSTALL 8"X6"8" TEE FITTING (TYP.)

PROVIDE AND INSTALL 8"X6"8" TEE FITTING (TYP.)

PROVIDE AND INSTALL 8"X6"8" TEE FITTING (TYP.)

PROVIDE AND INSTALL 8"X6"8" TEE FITTING (TYP.)

PROVIDE AND INSTALL FIRE CONNECTION TO BUILDING (TYP.)

PROVIDE AND INSTALL FIRE CONNECTION TO BUILDING (TYP.)

PROVIDE AND INSTALL FIRE CONNECTION TO BUILDING (TYP.)

PROVIDE AND INSTALL FIRE CONNECTION TO BUILDING (TYP.)

PROVIDE AND INSTALL 8" DUCTILE IRON FIRE WATER SERVICE LINE (TYP.)

PROVIDE AND INSTALL 8" DUCTILE IRON FIRE WATER SERVICE LINE (TYP.)

PROPOSED INDUSTRIAL BLDG A
1000' X 400'
400,000 S.F.
FFE=209.0

REFERENCE LINE – SEE SHEET SU-4

FOR PERMITTING PURPOSES ONLY
NOT RELEASED FOR CONSTRUCTION

GRAPHIC SCALE
40 20 0 40
SCALE IN FEET

© 2025 BL COMPANIES, INC. THESE DRAWINGS SHALL NOT BE UTILIZED BY ANY PERSON, FIRM OR CORPORATION WITHOUT THE SPECIFIC WRITTEN PERMISSION OF BL COMPANIES.

Architecture
Engineering
Environmental
Land Surveying

BL Companies

100 Constitution Plaza
10th Floor
Hartford, CT 06103
(860) 249-2200

STATE OF CONNECTICUT
TIMOTHY A. HOLE
3817
LICENSED PROFESSIONAL ENGINEER

PROPOSED MANUFACTURING / INDUSTRIAL DEVELOPMENT

50-58 RAINBOW ROAD
EAST GRANBY, CONNECTICUT 06026

REVISIONS

No.	Date	Desc.

Designed P.G.M.
Drawn P.G.M.
Reviewed T.A.H.
Scale 1"=40'
Project No. 2300888
Date 06/03/2025
CAD File: SUZ30088801

Title

SITE UTILITY PLAN

Sheet No.

SU-1

Xref (s) - BD23008880I ; XZ23008880I ; XC23008880I ; XC23008880J ; XC23008880K ; 2024-2632 HWY - 0516-101 Preliminary

8/3/2025, P:\MASTER\...\D-1-2300888 (DWG)\SU23008880I.DWG, SU-1 24X36 ARCH

AI Training Boilerplate: Unauthorized use of this drawing to train artificial intelligence systems is prohibited.

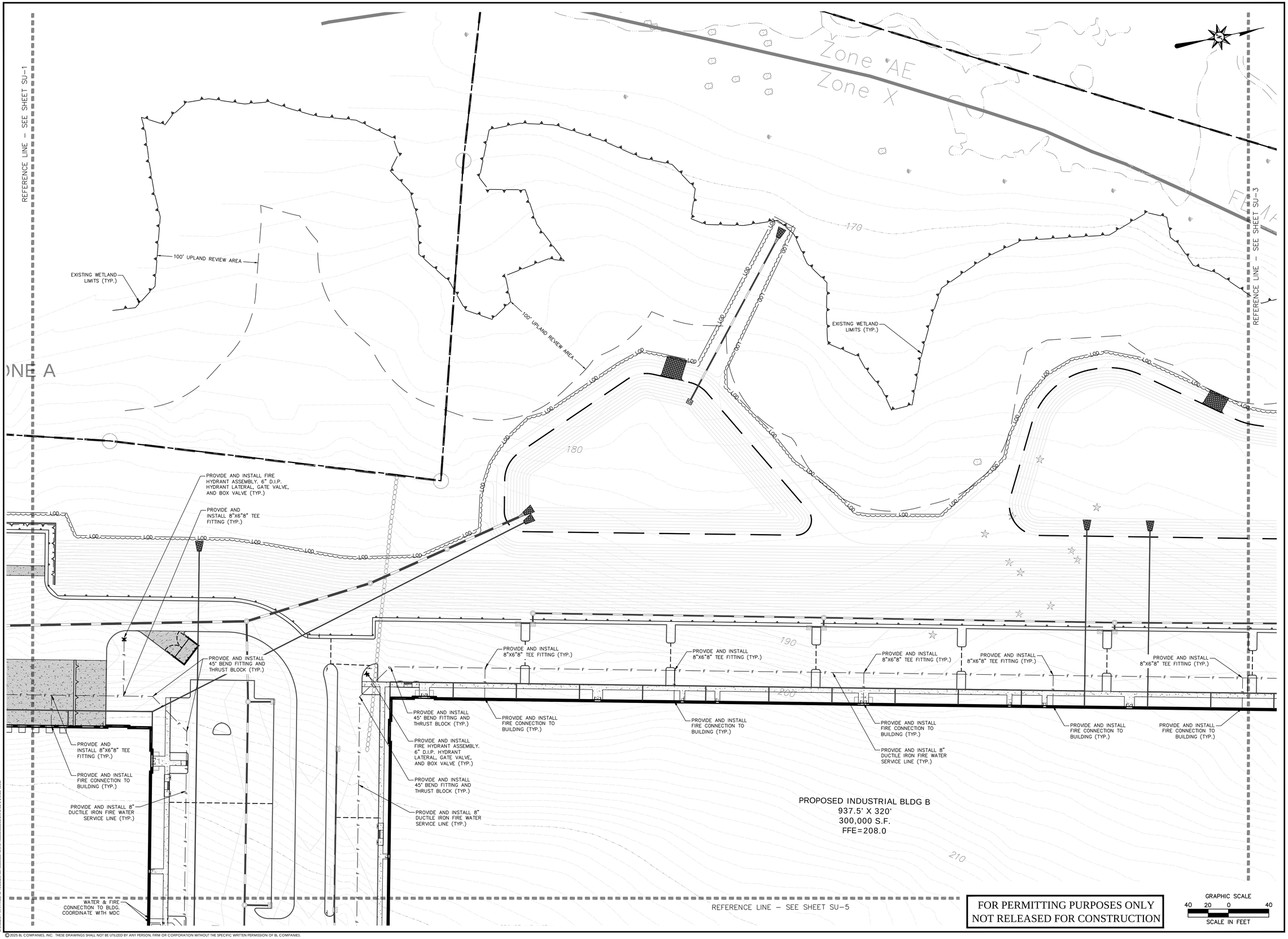

FOR PERMITTING PURPOSES ONLY
NOT RELEASED FOR CONSTRUCTION

GRAPHIC SCALE
40 20 0 40
SCALE IN FEET

© 2025 BL COMPANIES, INC. THESE DRAWINGS SHALL NOT BE UTILIZED BY ANY PERSON, FIRM OR CORPORATION WITHOUT THE SPECIFIC WRITTEN PERMISSION OF BL COMPANIES.

Architecture
Engineering
Environmental
Land Surveying

BL Companies

100 Constitution Plaza
10th Floor
Hartford, CT 06103
(860) 249-2200

STATE OF CONNECTION
TIMOTHY A. HOLLEY
3817
LICENSED
PROFESSIONAL ENGINEER

PROPOSED MANUFACTURING / INDUSTRIAL DEVELOPMENT

50-58 RAINBOW ROAD
EAST GRANBY, CONNECTICUT 06026

REVISIONS

No.	Date	Desc.

Designed	P.G.M.
Drawn	P.G.M.
Reviewed	T.A.H.
Scale	1"=40'
Project No.	2300888
Date	06/03/2025
CAD File: SU230088801	

Title

SITE UTILITY PLAN

Sheet No.

SU-2

Xref (s) - BD230088801, X223088801, XC230088801, XC230088802, XC230088803, XC230088804 - 2024-2852 HWY - 0518-101 Preliminary

I:\2023\23088\CAD\Plan\SU230088801.DWG 8/27/2025, PAANTHNE, G:\2023\23088\CAD\Plan\SU230088801.DWG 36x24 ANSI C

MFDR DISTRICT

EH DISTRICT

V DISTRICT

FEMA Flood Zone Line

Zone AE

Zone X

Sheldens Brook

REFERENCE LINE – SEE SHEET SU-2

EXISTING SEWER PUMP STATION

100' UPLAND REVIEW AREA

PROVIDE AND INSTALL 45° BEND FITTING AND THRUST BLOCK (TYP.)

PROVIDE AND INSTALL FIRE HYDRANT ASSEMBLY, 6" D.I.P. HYDRANT LATERAL, GATE VALVE, AND BOX VALVE (TYP.)

PROVIDE AND INSTALL 45° BEND FITTING AND THRUST BLOCK (TYP.)

PROVIDE AND INSTALL 8"X6"8" TEE FITTING (TYP.)

PROVIDE AND INSTALL 8" DUCTILE IRON FIRE WATER SERVICE LINE (TYP.)

PROVIDE AND INSTALL GAS METER AND BOLLARDS PER EVERSOURCE REQUIREMENTS

WATER & FIRE CONNECTION TO BLDG. COORDINATE WITH MDC

PROVIDE AND INSTALL ELECTRIC AND TELECOMMUNICATION CONNECTION TO BLDG. COORDINATE WITH EVERSOURCE

PROVIDE AND INSTALL TRANSFORMER, TRANSFORMER PAD, AND ANY BOLLARDS AS REQUIRED BY EVERSOURCE

PROVIDE AND INSTALL 2–4" PVC SCH 80 ELECTRICAL CONDUIT AND 2–4" PVC TELECOMMUNICATIONS CONDUIT (TYP.)

PROVIDE AND INSTALL GAS SERVICE PIPING PER EVERSOURCE REQUIREMENTS

PROVIDE AND INSTALL GAS SERVICE PIPING PER EVERSOURCE REQUIREMENTS

San MH
TF=186.57
INV. = 182.30

San MH
TF=184.77
INV. = 181.55

BUILDING B
300,000 S.F.
FFE=208.0

REFERENCE LINE – SEE SHEET SU-6

FOR PERMITTING PURPOSES ONLY
NOT RELEASED FOR CONSTRUCTION

GRAPHIC SCALE
40 20 0 40
SCALE IN FEET

Architecture
Engineering
Environmental
Land Surveying

BL Companies

100 Constitution Plaza
10th Floor
Hartford, CT 06103
(860) 249-2200

STATE OF CONNECTICUT
TIMOTHY A. HOLE
3817
LICENSED
PROFESSIONAL ENGINEER

PROPOSED MANUFACTURING / INDUSTRIAL DEVELOPMENT
50-58 RAINBOW ROAD
EAST GRANBY, CONNECTICUT 06026

REVISIONS

No.	Date	Desc.

Designed	P.G.M.
Drawn	P.G.M.
Reviewed	T.A.H.
Scale	1"=40'
Project No.	2300888
Date	06/03/2025
CAD File: SU230088801	

Title

SITE UTILITY PLAN

Sheet No.

SU-3

Xref 03 : I:\2023\03\00\2300888\01\CIVIL\SU230088801.DWG 3/3/2025 7:54:08 AM EDT

Xref 02 : I:\2023\03\00\2300888\01\CIVIL\SU230088802_XC230088802.DWG 3/3/2025 7:54:08 AM EDT

Xref 01 : I:\2023\03\00\2300888\01\CIVIL\SU230088803_XC230088803_2024-2832 HWY - 0518-101 Preliminary.DWG 3/3/2025 7:54:08 AM EDT

© 2025 BL COMPANIES, INC. THESE DRAWINGS SHALL NOT BE UTILIZED BY ANY PERSON, FIRM OR CORPORATION WITHOUT THE SPECIFIC WRITTEN PERMISSION OF BL COMPANIES.

REFERENCE LINE – SEE SHEET SU–1

PROVIDE AND INSTALL TRANSFORMER, TRANSFORMER PAD, AND ANY BOLLARDS AS REQUIRED BY EVERSOURCE

PROVIDE AND INSTALL ELECTRIC AND TELECOMMUNICATION CONNECTION TO BLDG. COORDINATE WITH EVERSOURCE

PROVIDE AND INSTALL 8" DUCTILE IRON FIRE WATER SERVICE LINE (TYP.)

PROVIDE AND INSTALL 2–4" PVC SCH 80 ELECTRICAL CONDUIT AND 2–4" PVC TELECOMMUNICATIONS CONDUIT

PROPOSED INDUSTRIAL BLDG A
1000' X 400'
400,000 S.F.
FFE=209.0

PROVIDE AND INSTALL 45° BEND FITTING AND THRUST BLOCK (TYP.)

PROVIDE AND INSTALL 8"X6"8" TEE FITTING (TYP.)

PROVIDE AND INSTALL FIRE HYDRANT ASSEMBLY. 6" D.I.P. HYDRANT LATERAL, GATE VALVE, AND BOX VALVE (TYP.)

PROVIDE AND INSTALL FIRE CONNECTION TO BUILDING (TYP.)

PROVIDE AND INSTALL 8"X6"8" TEE FITTING (TYP.)

PROVIDE AND INSTALL ELECTRICAL/ TELECOMMUNICATIONS MANHOLES. COORDINATE WITH EVERSOURCE

PROVIDE AND INSTALL 8" DUCTILE IRON FIRE WATER SERVICE LINE (TYP.)

PROVIDE AND INSTALL FIRE CONNECTION TO BUILDING (TYP.)

PROVIDE AND INSTALL 8"X6"8" TEE FITTING (TYP.)

PROVIDE AND INSTALL 2–4" PVC SCH 80 ELECTRICAL CONDUIT AND 2–4" PVC TELECOMMUNICATIONS CONDUIT

PROVIDE AND INSTALL FIRE CONNECTION TO BUILDING (TYP.)

PROVIDE AND INSTALL 8"X6"8" TEE FITTING (TYP.)

PROVIDE AND INSTALL ELECTRICAL/ TELECOMMUNICATIONS MANHOLES. COORDINATE WITH EVERSOURCE

PROVIDE AND INSTALL FIRE CONNECTION TO BUILDING (TYP.)

PROVIDE AND INSTALL 8"X6"8" TEE FITTING (TYP.)

REFERENCE LINE – SEE SHEET SU–5

WINDSOR

EAST GRANBY

EXISTING WETLAND LIMITS (TYP.)

100' UPLAND REVIEW AREA

EXISTING VERNAL POOL

PROVIDE AND INSTALL 2–4" PVC SCH 80 ELECTRICAL CONDUIT AND 2–4" PVC TELECOMMUNICATIONS CONDUIT (TYP.)

REFERENCE LINE – SEE SHEET SU–7

FOR PERMITTING PURPOSES ONLY
NOT RELEASED FOR CONSTRUCTION

GRAPHIC SCALE
40 20 0 40
SCALE IN FEET

Architecture
Engineering
Environmental
Land Surveying

BL Companies

100 Constitution Plaza
10th Floor
Hartford, CT 06103
(860) 249-2200

STATE OF CONNECTION
TIMOTHY A. HOUSE
3817
LICENSED PROFESSIONAL ENGINEER

PROPOSED MANUFACTURING / INDUSTRIAL DEVELOPMENT

50-58 RAINBOW ROAD
EAST GRANBY, CONNECTICUT 06026

REVISIONS
No. Date Desc.

Designed	P.G.M.
Drawn	P.G.M.
Reviewed	T.A.H.
Scale	1"=40'
Project No.	2300888
Date	06/03/2025
CAD File: SU230088801	

Title

SITE UTILITY PLAN

Sheet No.

SU-4

Xref (s) : BD230088801, X223008801, XC2300888801, XC2300888802, XC2300888803, 2024-2832-HWY, 0518-101-Preliminary

K:\2300S_PM\ARTPRE_G\ 1-DRGS\1-SW\2300888\SW01\SU230088801.DWG 36x24 ANSI C

© 2025 BL COMPANIES, INC. THESE DRAWINGS SHALL NOT BE UTILIZED BY ANY PERSON, FIRM OR CORPORATION WITHOUT THE SPECIFIC WRITTEN PERMISSION OF BL COMPANIES.

REFERENCE LINE – SEE SHEET SU-2

REFERENCE LINE – SEE SHEET SU-4

WATER & FIRE CONNECTION TO BLDG. COORDINATE WITH MDC

PROVIDE AND INSTALL ELECTRIC AND TELECOMMUNICATION CONNECTION TO BLDG. COORDINATE WITH EVERSOURCE

PROVIDE AND INSTALL GAS METER AND BOLLARDS PER EVERSOURCE REQUIREMENTS

PROVIDE AND INSTALL 2-4" PVC SCH 80 ELECTRICAL CONDUIT AND 2-4" PVC TELECOMMUNICATIONS CONDUIT (TYP.)

PROVIDE AND INSTALL TRANSFORMER, TRANSFORMER PAD, AND ANY BOLLARDS AS REQUIRED BY EVERSOURCE

PROVIDE AND INSTALL ELECTRICAL/ TELECOMMUNICATIONS MANHOLES. COORDINATE WITH EVERSOURCE

PROVIDE AND INSTALL FIRE CONNECTION TO BUILDING (TYP.)

PROVIDE AND INSTALL 8"X6"8" TEE FITTING (TYP.)

CONNECTION TO BUILDING INV OUT =205.00(E)

PROVIDE AND INSTALL 8"X6"8" TEE FITTING (TYP.)

PROVIDE AND INSTALL GATE VALVE AND BOX (TYP.)

PROVIDE AND INSTALL 45° BEND FITTING AND THRUST BLOCK (TYP.)

PROVIDE AND INSTALL 8"X6"8" TEE FITTING (TYP.)

PROVIDE AND INSTALL FIRE HYDRANT ASSEMBLY, 6" D.I.P. HYDRANT LATERAL, GATE VALVE, AND BOX VALVE (TYP.)

PROVIDE AND INSTALL FIRE CONNECTION TO BUILDING (TYP.)

PROVIDE AND INSTALL 4" DUCTILE IRON DOMESTIC WATER SERVICE LINE (TYP.)

PROVIDE AND INSTALL 8" DUCTILE IRON FIRE WATER SERVICE LINE (TYP.)

PROVIDE AND INSTALL FIRE CONNECTION TO BUILDING (TYP.)

PROVIDE AND INSTALL 8"X6"8" TEE FITTING (TYP.)

PROPOSED INDUSTRIAL BLDG B
937.5' X 320'
300,000 S.F.
FFE=208.0

PROVIDE AND INSTALL FIRE CONNECTION TO BUILDING (TYP.)

PROVIDE AND INSTALL 8"X6"8" TEE FITTING (TYP.)

PROVIDE AND INSTALL 2-4" PVC SCH 80 ELECTRICAL CONDUIT AND 2-4" PVC TELECOMMUNICATIONS CONDUIT (TYP.)

PROVIDE AND INSTALL ELECTRICAL/ TELECOMMUNICATIONS MANHOLES. COORDINATE WITH EVERSOURCE

PROVIDE AND INSTALL FIRE CONNECTION TO BUILDING (TYP.)

PROVIDE AND INSTALL 8"X6"8" TEE FITTING (TYP.)

PROVIDE AND INSTALL 8"X6"8" TEE FITTING (TYP.)

PROVIDE AND INSTALL 45° BEND FITTING AND THRUST BLOCK (TYP.)

PROVIDE AND INSTALL 2-4" PVC SCH 80 ELECTRICAL CONDUIT AND 2-4" PVC TELECOMMUNICATIONS CONDUIT (TYP.)

PROVIDE AND INSTALL ELECTRICAL/ TELECOMMUNICATIONS MANHOLES. COORDINATE WITH EVERSOURCE

PROVIDE AND INSTALL 4" DUCTILE IRON DOMESTIC WATER SERVICE LINE (TYP.)

MH-2
TF=205.80
INV IN=196.44(S)
INV OUT =196.44(N)

566'-8" PVC @ 1.00%

723'-8" PVC @ 1.00%

PROVIDE AND INSTALL FIRE HYDRANT ASSEMBLY, 6" D.I.P. HYDRANT LATERAL, GATE VALVE, AND BOX VALVE (TYP.)

PROVIDE AND INSTALL 45° BEND FITTING AND THRUST BLOCK (TYP.)

MH-1
TF=205.60
INV IN=202.10(W)
INV OUT =202.10(N)

PROVIDE AND INSTALL GAS SERVICE PIPING PER EVERSOURCE REQUIREMENTS

PROVIDE AND INSTALL ELECTRICAL/ TELECOMMUNICATIONS MANHOLES. COORDINATE WITH EVERSOURCE

PROVIDE AND INSTALL 2-4" PVC SCH 80 ELECTRICAL CONDUIT AND 2-4" PVC TELECOMMUNICATIONS CONDUIT (TYP.)

100' UPLAND REVIEW AREA

EXISTING WETLAND LIMITS (TYP.)

EXISTING WETLAND LIMITS (TYP.)

REFERENCE LINE – SEE SHEET SU-6

REFERENCE LINE – SEE SHEET SU-7

REFERENCE LINE – SEE SHEET SU-8

FOR PERMITTING PURPOSES ONLY
NOT RELEASED FOR CONSTRUCTION

GRAPHIC SCALE
40 20 0 40
SCALE IN FEET

© 2025 BL COMPANIES, INC. THESE DRAWINGS SHALL NOT BE UTILIZED BY ANY PERSON, FIRM OR CORPORATION WITHOUT THE SPECIFIC WRITTEN PERMISSION OF BL COMPANIES.

Architecture
Engineering
Environmental
Land Surveying

BL Companies

100 Constitution Plaza
10th Floor
Hartford, CT 06103
(860) 249-2200

STATE OF CONNECTICUT
TIMOTHY A. HOUE
3817
LICENSED PROFESSIONAL ENGINEER

PROPOSED MANUFACTURING / INDUSTRIAL DEVELOPMENT
50-58 RAINBOW ROAD
EAST GRANBY, CONNECTICUT 06026

REVISIONS
No. Date Desc.

Designed	P.G.M.
Drawn	P.G.M.
Reviewed	T.A.H.
Scale	1"=40'
Project No.	2300888
Date	06/03/2025
CAD File: SU230088801	

Title

SITE UTILITY PLAN

Sheet No.

SU-5

Xref to : I:\2023\00888\01_XC230088801_XC230088802_XC230088803_XC230088804 - 2024-2822-NWY - 0518-101 Preliminary

I:\2023\00888\01_PAVAT\PRE_01-1\DRGS\1801_230088801 (NWY) 05218230088801.DWG 33-5 24X36 ARCH

REFERENCE LINE – SEE SHEET SU-3

BUILDING B
300,000 S.F.
FFE=208.0

PROVIDE AND INSTALL 2-4" PVC SCH 80 ELECTRICAL CONDUIT AND 2-4" PVC TELECOMMUNICATIONS CONDUIT (TYP.)

CONNECTION TO BUILDING
INV OUT =205.00(E)

PROVIDE AND INSTALL 8"X6"8" TEE FITTING (TYP.)

PROVIDE AND INSTALL 45° BEND FITTING AND THRUST BLOCK (TYP.)

PROVIDE AND INSTALL FIRE HYDRANT ASSEMBLY. 6" D.I.P. HYDRANT LATERAL, GATE VALVE, AND BOX VALVE (TYP.)

PROVIDE AND INSTALL 45° BEND FITTING AND THRUST BLOCK (TYP.)

PROVIDE AND INSTALL GATE VALVE AND BOX (TYP.)

PROVIDE AND INSTALL 45° BEND FITTING AND THRUST BLOCK (TYP.)

PROVIDE AND INSTALL GAS SERVICE PIPING PER EVERSOURCE REQUIREMENTS

106'-8" PVC @ 6.63%

MH-3
TF=204.40
INV IN=198.64(W)
INV OUT =198.64(NE)

149'-8" PVC @ 6.36%

MH-4
TF=204.36
INV IN=189.21(SW)
INV IN=189.21(S)
INV OUT =189.21(E)

58'-8" PVC @ 4.00%

PROVIDE AND INSTALL 11° BEND FITTING AND THRUST BLOCK (TYP.)

PROVIDE AND INSTALL GAS SERVICE PIPING PER EVERSOURCE REQUIREMENTS (TYP.)

CONNECT TO EXISTING WATER MAIN WITH 6" TAPPING SLEEVE AND VALVE. COORDINATE WITH MDC

MH-6
TF=200.30
INV IN=186.90(W)
CONTRACTOR TO VERIFY EXISTING INV

San MH
TF=191.42
INV. IN = 179.80

San MH
TF=188.89
INV. = 177.38

San MH
TF=187.16
INV. = 175.05

San MH
TF=183.32
INV. = 174.45

San MH
TF=180.86
INV. = 173.38

ZONE V
ZONE GPT

100' UPLAND REVIEW AREA

EXISTING WETLAND LIMITS (TYP.)

REFERENCE LINE – SEE SHEET SU-5

REFERENCE LINE – SEE SHEET SU-8

FOR PERMITTING PURPOSES ONLY
NOT RELEASED FOR CONSTRUCTION

GRAPHIC SCALE
40 20 0 40
SCALE IN FEET

© 2025 BL COMPANIES, INC. THESE DRAWINGS SHALL NOT BE UTILIZED BY ANY PERSON, FIRM OR CORPORATION WITHOUT THE SPECIFIC WRITTEN PERMISSION OF BL COMPANIES.

Architecture
Engineering
Environmental
Land Surveying

BL Companies

100 Constitution Plaza
10th Floor
Hartford, CT 06103
(860) 249-2200

STATE OF CONNECTICUT
TIMOTHY A. HOLM
3817
LICENSED PROFESSIONAL ENGINEER

PROPOSED MANUFACTURING / INDUSTRIAL DEVELOPMENT
50-58 RAINBOW ROAD
EAST GRANBY, CONNECTICUT 06026

REVISIONS
No. Date Desc.

Designed	P.G.M.
Drawn	P.G.M.
Reviewed	T.A.H.
Scale	1"=40'
Project No.	2300888
Date	06/03/2025
CAD File: SU230088801	

Title
SITE UTILITY PLAN

Sheet No.
SU-6

Xref (s) : BD230088801, X223008880I , XC230088801 , XC223008880J , XC230088802 , XC223008880K , 2024-2832-HWY , 0518-101 Preliminary

E:\230088_PARAFFINE_G_WORKSTATION\230088801\DWG\SU230088801.DWG 24X36 ARCH

REFERENCE LINE – SEE SHEET SU–4

REFERENCE LINE – SEE SHEET SU–5

REFERENCE LINE – SEE SHEET SU–8

EXISTING WETLAND LIMITS (TYP.)

100' UPLAND REVIEW AREA

PROVIDE AND INSTALL ELECTRICAL/ TELECOMMUNICATIONS MANHOLES. COORDINATE WITH EVERSOURCE

EXISTING WETLAND LIMITS (TYP.)

100' UPLAND REVIEW AREA

PROVIDE AND INSTALL 2–4" PVC ELECTRICAL CONDUIT AND 2–4" PVC TELECOMMUNICATIONS CONDUIT (TYP.)

PROPOSED ELECTRICAL/ TELECOMMUNICATIONS LINE TIE IN. EXISTING ELECTRICAL LINE LOCATION TO BE FIELD VERIFIED

15" RCP Flared End Inv=184.02

Ex. Catch Basin (Typ.)

Ex. Utility Pole (Typ.)

Ex. Sign

Ex. Sign MH TF=197.80 FL Inv=178.43(N) FL Inv=178.11(S)

Ex. Sign MH TF=195.07 FL Inv=174.57(N) FL Inv=174.25(S)

Ex. Elect MH

Ex. Telco MH

Ex. Disc. MH

Ex. Tree Line

Tie to Ex. Disc. MH S77° 28' 04"E 59.95'

Ex. HH

Ex. IP

Ex. Drainage Line

Ex. Water Line

Ex. Gas Line

Ex. Overhead Utility Line

FOR PERMITTING PURPOSES ONLY
NOT RELEASED FOR CONSTRUCTION

GRAPHIC SCALE
40 20 0 40
SCALE IN FEET

Architecture
Engineering
Environmental
Land Surveying

BL Companies

100 Constitution Plaza
10th Floor
Hartford, CT 06103
(860) 249-2200

STATE OF CONNECTICUT
TIMOTHY A. HOUSE
3817
LICENSED PROFESSIONAL ENGINEER

PROPOSED MANUFACTURING / INDUSTRIAL DEVELOPMENT

50-58 RAINBOW ROAD
EAST GRANBY, CONNECTICUT 06026

REVISIONS

No.	Date	Desc.

Designed	P.G.M.
Drawn	P.G.M.
Reviewed	T.A.H.
Scale	1"=40'
Project No.	2300888
Date	06/03/2025

CAD File:
SU230088801

Title

SITE UTILITY PLAN

Sheet No.

SU-7

Xref G: \B0230088801_XZ230088801_XC230088802_XC230088803_2024-2832 HWY-10518-101 Preliminary

3/3/2025, TAHARTNEL, G:\JOBS\2300888\DWG\1.1\SZ230088801.DWG 30-2 24X36 ARCH

© 2025 BL COMPANIES, INC. THESE DRAWINGS SHALL NOT BE UTILIZED BY ANY PERSON, FIRM OR CORPORATION WITHOUT THE SPECIFIC WRITTEN PERMISSION OF BL COMPANIES.

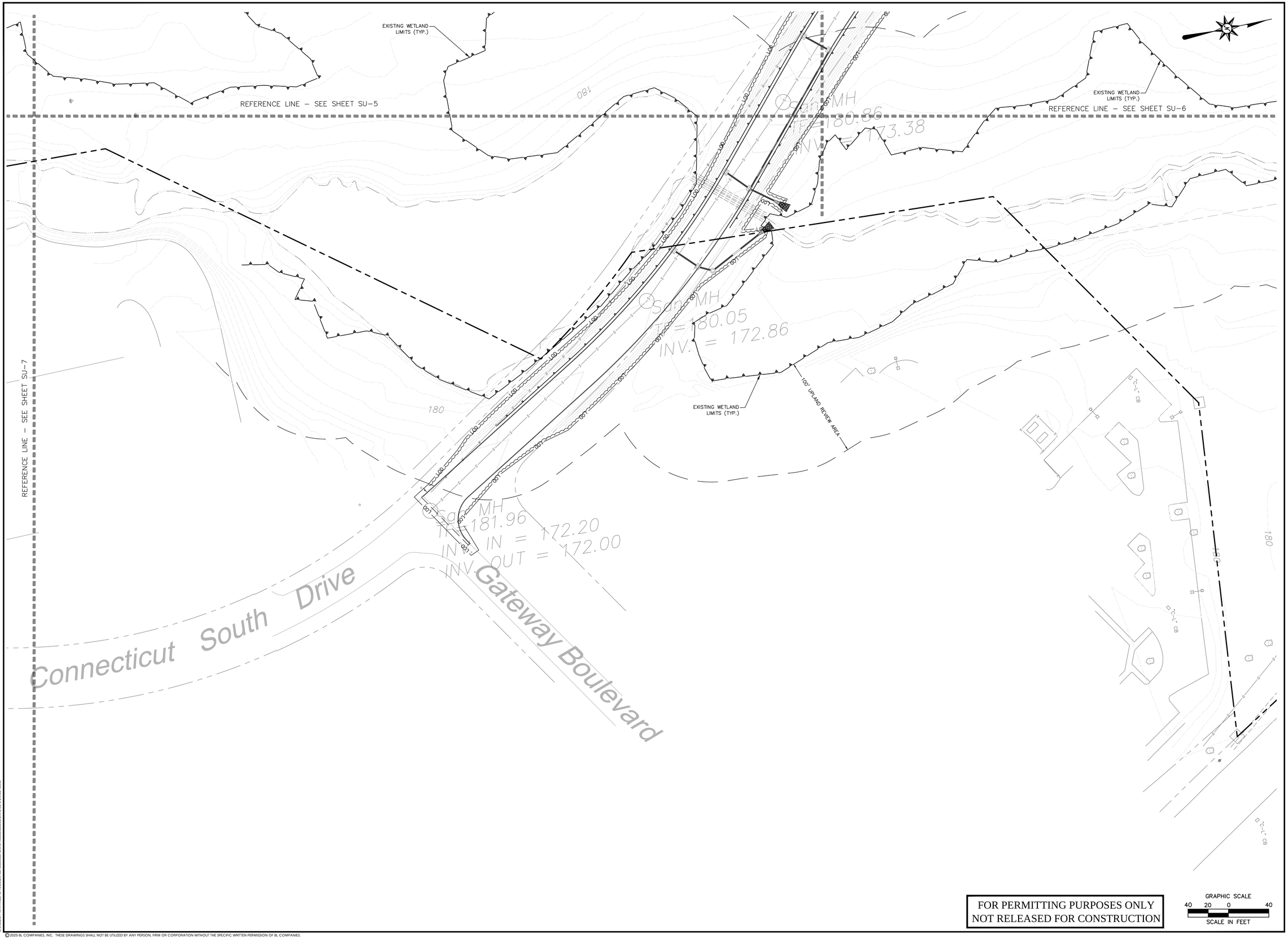

FOR PERMITTING PURPOSES ONLY
NOT RELEASED FOR CONSTRUCTION

Architecture
Engineering
Environmental
Land Surveying
BL Companies

100 Constitution Plaza
10th Floor
Hartford, CT 06103
(860) 249-2200

STATE OF CONNECTICUT
TIMOTHY A. HOULE
36117
LICENSED
PROFESSIONAL ENGINEER

PROPOSED MANUFACTURING / INDUSTRIAL DEVELOPMENT

50-58 RAINBOW ROAD
EAST GRANBY, CONNECTICUT 06026

REVISIONS

No.	Date	Desc.

Designed	P.G.M.
Drawn	P.G.M.
Reviewed	T.A.H.
Scale	1"=40'
Project No.	2300888
Date	06/03/2025
CAD File: SU230088801	

Title

SITE UTILITY PLAN

Sheet No.

SU-8

Xref (s): ; BD230088801 ; XC230088801 ; XC230088802 ; XC230088803 ; XC230088804 ; 2024-2832 HWY ; 0518-101 Preliminary

6/3/2025, PMARTINEZ, G:\JOBS23\08\2300888\DWG\SU230088801.DWG, SU-8 24X36 40SC

© 2025 BL COMPANIES, INC. THESE DRAWINGS SHALL NOT BE UTILIZED BY ANY PERSON, FIRM OR CORPORATION WITHOUT THE SPECIFIC WRITTEN PERMISSION OF BL COMPANIES.

EROSION CONTROL LEGEND

- PROPERTY LINE
- LOD — LIMIT OF DISTURBANCE AND SITEWORK CONTRACT LIMIT LINE
- EXISTING WETLAND
- 100' UPLAND REVIEW AREA
- SAWCUT LINE
- SF — SILT FENCE
- SEDIMENT TRAP TRIBUTARY AREA
- DIVERSION SWALE
- STONE CHECK DAM
- LIMIT OF CLEARING
- IP — SILT SACK INLET PROTECTION
- CONCRETE WASH PIT
- TEMPORARY MATERIALS STOCKPILE WITH DOUBLE ROW SILT FENCE
- ECB — EROSION CONTROL BLANKET
- CE — CONSTRUCTION ENTRANCE
- SOIL BOUNDARY

SOILS

5	WILBRAHAM SILT LOAM, 0 TO 3 PERCENT SLOPES (HSG C)
12	RAYPOL SILT LOAM, 0 TO 3 PERCENT SLOPES (HSG B)
18	CATDEN AND FREETOWN SOILS, 0 TO 2 PERCENT SLOPES (HSG B)
23A	SUDBURY SANDY LOAM, 0 TO 5 PERCENT SLOPES (HSG A)
29A	AGAWAM FINE SANDY LOAM, 0 TO 3 PERCENT SLOPES (HSG B)
34A	MERRIMAC FINE SANDY LOAM, 0 TO 3 PERCENT SLOPES (HSG A)
34B	MERRIMAC FINE SANDY LOAM, 3 TO 8 PERCENT SLOPES (HSG A)
37C	MANCHESTER GRAVELLY SANDY LOAM, 3 TO 15 PERCENT SLOPES (HSG A)
55B	WATCHAUG FINE SANDY LOAM, 3 TO 8 PERCENT SLOPES (HSG B)
82B	BROADBROOK SILT LOAM, 3 TO 8 PERCENT SLOPES (HSG C)
82C	BROADBROOK SILT LOAM, 8 TO 15 PERCENT SLOPES (HSG C)
306	UDORTHENTS–URBAN LAND COMPLEX (HSG B)

GENERAL NOTES

1. PROVIDE AND INSTALL EROSION CONTROL BLANKETS ON ALL SLOPES 2:1 OR STEEPER
2. FOR 3:1 SLOPES, EROSION CONTROL BLANKETS ARE TO BE INSTALLED AT THE DISCRETION OF THE CONTRACTOR

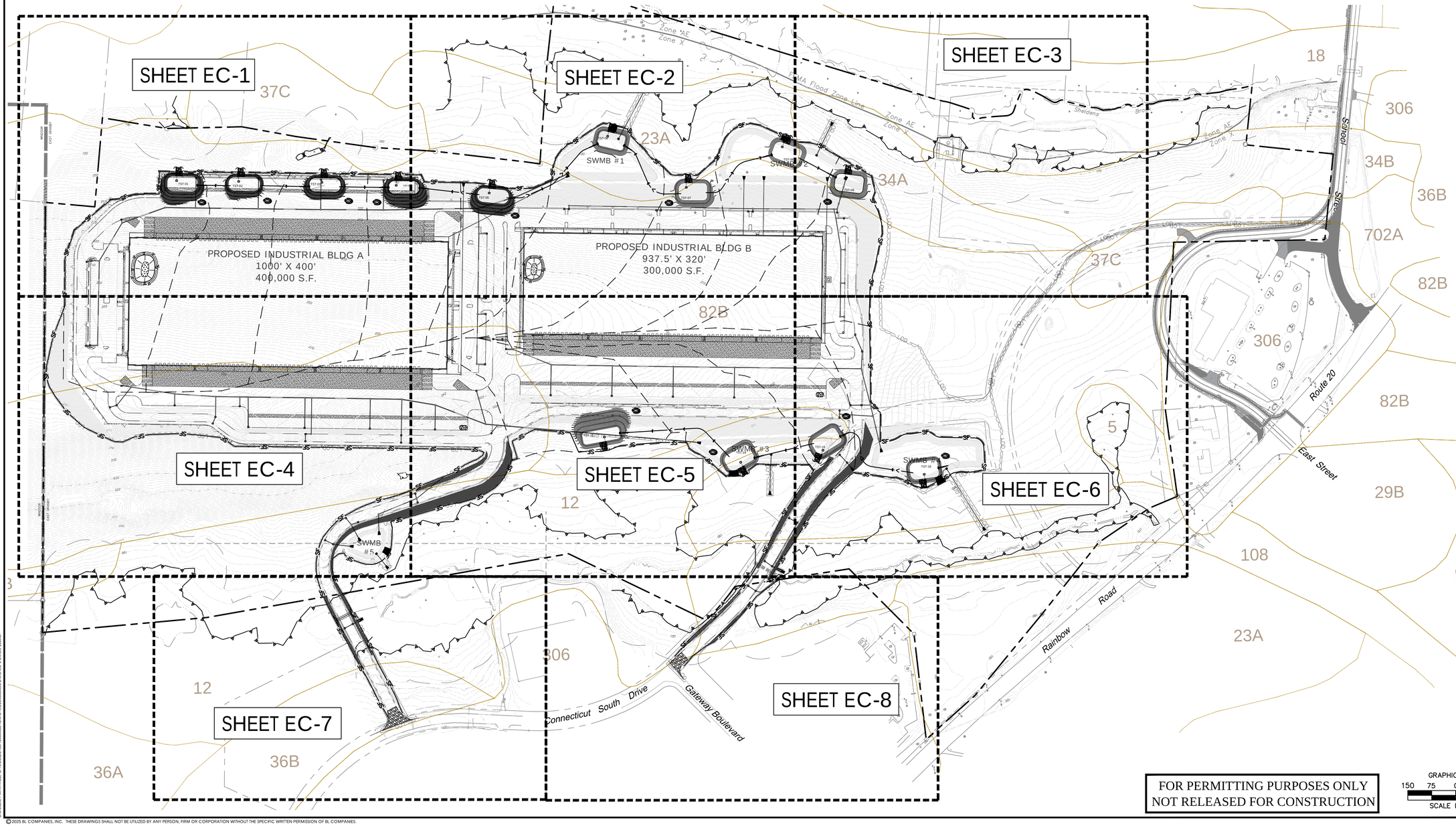

FOR PERMITTING PURPOSES ONLY
NOT RELEASED FOR CONSTRUCTION

GRAPHIC SCALE
150 75 0 150
SCALE IN FEET

© 2025 BL COMPANIES, INC. THESE DRAWINGS SHALL NOT BE UTILIZED BY ANY PERSON, FIRM OR CORPORATION WITHOUT THE SPECIFIC WRITTEN PERMISSION OF BL COMPANIES.

Architecture
Engineering
Environmental
Land Surveying

BL Companies

100 Constitution Plaza
10th Floor
Hartford, CT 06103
(860) 249-2200

STATE OF CONNECTICUT
TIMOTHY A. HOLLY
3817
LICENSED PROFESSIONAL ENGINEER

PROPOSED MANUFACTURING / INDUSTRIAL DEVELOPMENT
50-58 RAINBOW ROAD
EAST GRANBY, CONNECTICUT 06026

REVISIONS		
No.	Date	Desc.

Designed	P.G.M.
Drawn	P.G.M.
Reviewed	T.A.H.
Scale	1"=150'
Project No.	2300888
Date	06/03/2025
CAD File: EC230088801	

Title
OVERALL SEDIMENT AND EROSION CONTROL PLAN

Sheet No.
EC-0

Xref (s) - I:\2023\00888\01_X23008801_XC23008801_XC23008802_XC23008803_XY20023701_2024-2832 HWY - 0518-101 Preliminary

I:\2023\00888\01\PAVAPRVEC-G-1-OVRECS1.DWG | 2300888 | DWG | EC230088801.DWG | EC-0 | 24x36 | BWG

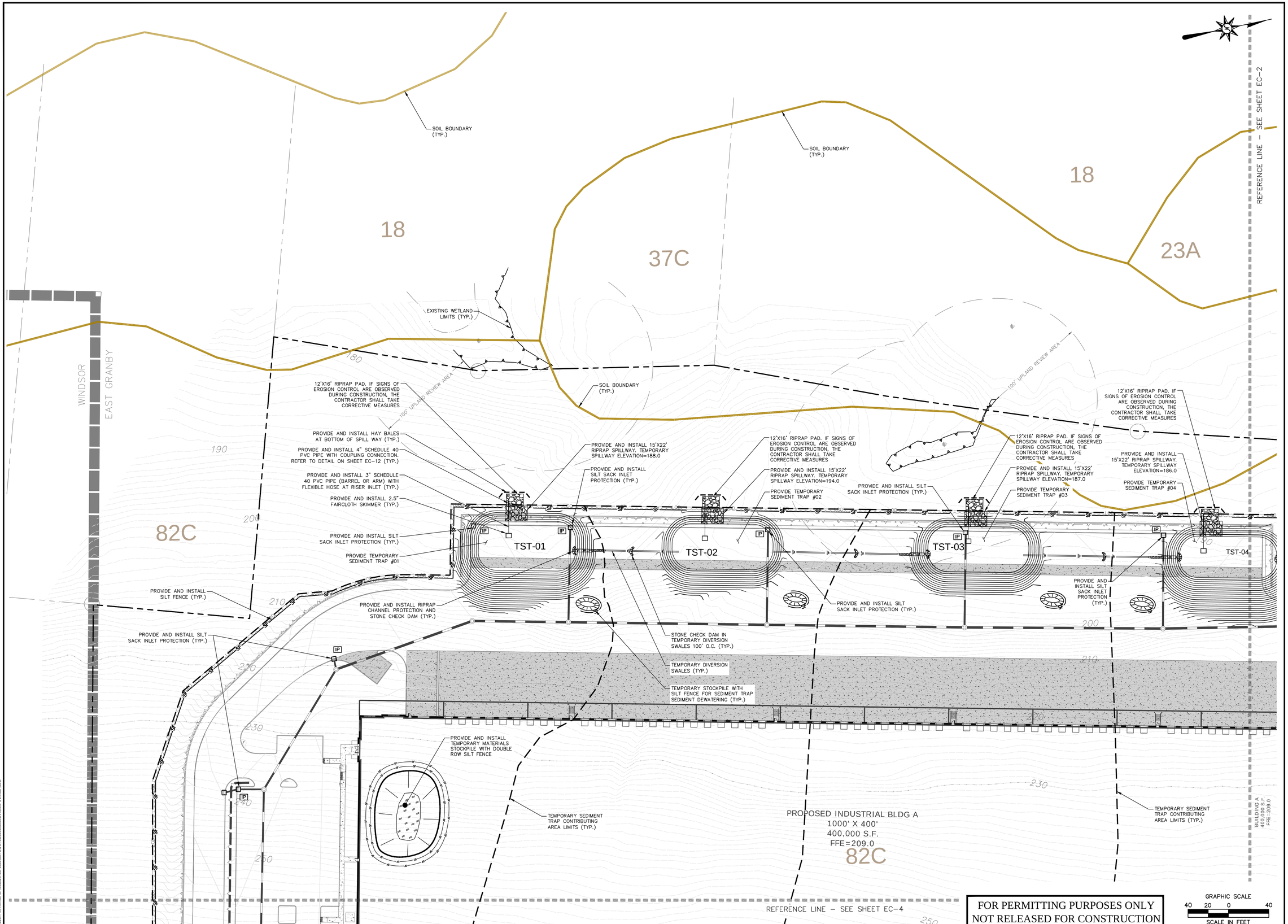

Architecture
Engineering
Environmental
Land Surveying

BL Companies

100 Constitution Plaza
10th Floor
Hartford, CT 06103
(860) 249-2200

STATE OF CONNECTICUT
TIMOTHY A. HOUE
26117
LICENSED PROFESSIONAL ENGINEER

PROPOSED MANUFACTURING / INDUSTRIAL DEVELOPMENT

50-58 RAINBOW ROAD
EAST GRANBY, CONNECTICUT 06026

REVISIONS

No.	Date	Desc.

Designed	P.G.M.
Drawn	P.G.M.
Reviewed	T.A.H.
Scale	1"=40'
Project No.	2300888
Date	06/03/2025
CAD File: EC230088801	

Title

SEDIMENT AND EROSION CONTROL PLAN

Sheet No.

EC-1

Xref's: I:\2023\03\2300881\XC\2300881_XC230088801.DWG | XC230088802_XY200033701: 2024-2802 HWY; 0519-101 Preliminary

I:\2023\03\2300881\PW\PWFILES_C-1_\CIVIL\01 SHT\2300881 (DWG) [EC230088801.DWG] EC-1 24X36 #SIC

© 2025 BL COMPANIES, INC. THESE DRAWINGS SHALL NOT BE UTILIZED BY ANY PERSON, FIRM OR CORPORATION WITHOUT THE SPECIFIC WRITTEN PERMISSION OF BL COMPANIES.

REFERENCE LINE – SEE SHEET EC–1

REFERENCE LINE – SEE SHEET EC–3

18

18

23A

23A

23A

82C

82B

Zone AE

Zone X

FEMA

EXISTING WETLAND LIMITS (TYP.)

EXISTING WETLAND LIMITS (TYP.)

100' UPLAND REVIEW AREA

100' UPLAND REVIEW AREA

SOIL BOUNDARY (TYP.)

SOIL BOUNDARY (TYP.)

PROVIDE AND INSTALL 15'X22' RIPRAP SPILLWAY, TEMPORARY SPILLWAY ELEVATION=176.0

12'X16' RIPRAP PAD, IF SIGNS OF EROSION CONTROL ARE OBSERVED DURING CONSTRUCTION, THE CONTRACTOR SHALL TAKE CORRECTIVE MEASURES

PROVIDE AND INSTALL HAY BALES AT BOTTOM OF SPILL WAY (TYP.)

PROVIDE AND INSTALL 4" SCHEDULE 40 PVC PIPE WITH COUPLING CONNECTION. REFER TO DETAIL ON SHEET EC–12 (TYP.)

PROVIDE AND INSTALL 3" SCHEDULE 40 PVC PIPE (BARREL OR ARM) WITH FLEXIBLE HOSE AT RISER INLET (TYP.)

PROVIDE AND INSTALL 2.5" FAIRCLOTH SKIMMER (TYP.)

PROVIDE TEMPORARY SEDIMENT TRAP #06

TST-06

SWMB #1

12'X16' RIPRAP PAD, IF SIGNS OF EROSION CONTROL ARE OBSERVED DURING CONSTRUCTION, THE CONTRACTOR SHALL TAKE CORRECTIVE MEASURES

PROVIDE AND INSTALL 15'X22' RIPRAP SPILLWAY, TEMPORARY SPILLWAY ELEVATION=184.0

PROVIDE TEMPORARY SEDIMENT TRAP #07

TST-07

12'X16' RIPRAP PAD, IF SIGNS OF EROSION CONTROL ARE OBSERVED DURING CONSTRUCTION, THE CONTRACTOR SHALL TAKE CORRECTIVE MEASURES

PROVIDE AND INSTALL 15'X22' RIPRAP SPILLWAY, TEMPORARY SPILLWAY ELEVATION=178.0

PROVIDE TEMPORARY SEDIMENT TRAP #08

PROVIDE AND INSTALL SILT FENCE (TYP.)

SWMB #2

TST-08

PROVIDE AND INSTALL SILT FENCE (TYP.)

PROVIDE AND INSTALL RIPRAP CHANNEL PROTECTION AND STONE CHECK DAM (TYP.)

12'X16' RIPRAP PAD, IF SIGNS OF EROSION CONTROL ARE OBSERVED DURING CONSTRUCTION, THE CONTRACTOR SHALL TAKE CORRECTIVE MEASURES

PROVIDE AND INSTALL 15'X22' RIPRAP SPILLWAY, TEMPORARY SPILLWAY ELEVATION=189.0

PROVIDE TEMPORARY SEDIMENT TRAP #05

TST-04

TST-05

TEMPORARY DIVERSION SWALES (TYP.)

STONE CHECK DAM IN TEMPORARY DIVERSION SWALES 100' O.C. (TYP.)

TEMPORARY STOCKPILE WITH SILT FENCE FOR SEDIMENT TRAP SEDIMENT DEWATERING (TYP.)

TEMPORARY SEDIMENT TRAP CONTRIBUTING AREA LIMITS (TYP.)

PROVIDE AND INSTALL TEMPORARY MATERIALS STOCKPILE WITH DOUBLE ROW SILT FENCE

PROVIDE AND INSTALL SILT SACK INLET PROTECTION (TYP.)

PROVIDE AND INSTALL SILT SACK INLET PROTECTION (TYP.)

PROVIDE AND INSTALL SILT SACK INLET PROTECTION (TYP.)

PROVIDE AND INSTALL SILT SACK INLET PROTECTION (TYP.)

PROVIDE AND INSTALL SILT SACK INLET PROTECTION (TYP.)

TEMPORARY SEDIMENT TRAP CONTRIBUTING AREA LIMITS (TYP.)

BUILDING A 300,000 S.F. FFE=209.0

BUILDING B 300,000 S.F. FFE=208.0

PROPOSED INDUSTRIAL BLDG B
937.5' X 320'
300,000 S.F.
FFE=208.0

REFERENCE LINE – SEE SHEET EC–5

FOR PERMITTING PURPOSES ONLY
NOT RELEASED FOR CONSTRUCTION

GRAPHIC SCALE
40 20 0 40
SCALE IN FEET

Architecture
Engineering
Environmental
Land Surveying

BL Companies

100 Constitution Plaza
10th Floor
Hartford, CT 06103
(860) 249-2200

STATE OF CONNECTION
TIMOTHY A. HOLE
3817
LICENSED
PROFESSIONAL ENGINEER

PROPOSED MANUFACTURING / INDUSTRIAL DEVELOPMENT

50-58 RAINBOW ROAD
EAST GRANBY, CONNECTICUT 06026

REVISIONS

No.	Date	Desc.

Designed	P.G.M.
Drawn	P.G.M.
Reviewed	T.A.H.
Scale	1"=40'
Project No.	2300888
Date	06/03/2025
CAD File: EC230088801	

Title

SEDIMENT AND EROSION CONTROL PLAN

Sheet No.

EC-2

Xref (s) : I:\2023\00\88\01_XC\230088801 ; XC\230088802 ; XC\230088805 ; XY\00203701 ; 2024_2832 HWY ; 0519-101 Preliminary

© 2025 BL COMPANIES, INC. THESE DRAWINGS SHALL NOT BE UTILIZED BY ANY PERSON, FIRM OR CORPORATION WITHOUT THE SPECIFIC WRITTEN PERMISSION OF BL COMPANIES.

6/3/2025, PAKARTINEZ, I:\2023\00\88\01\230088801 DWG\EC230088801 DWG EC-2 24X36 ARC

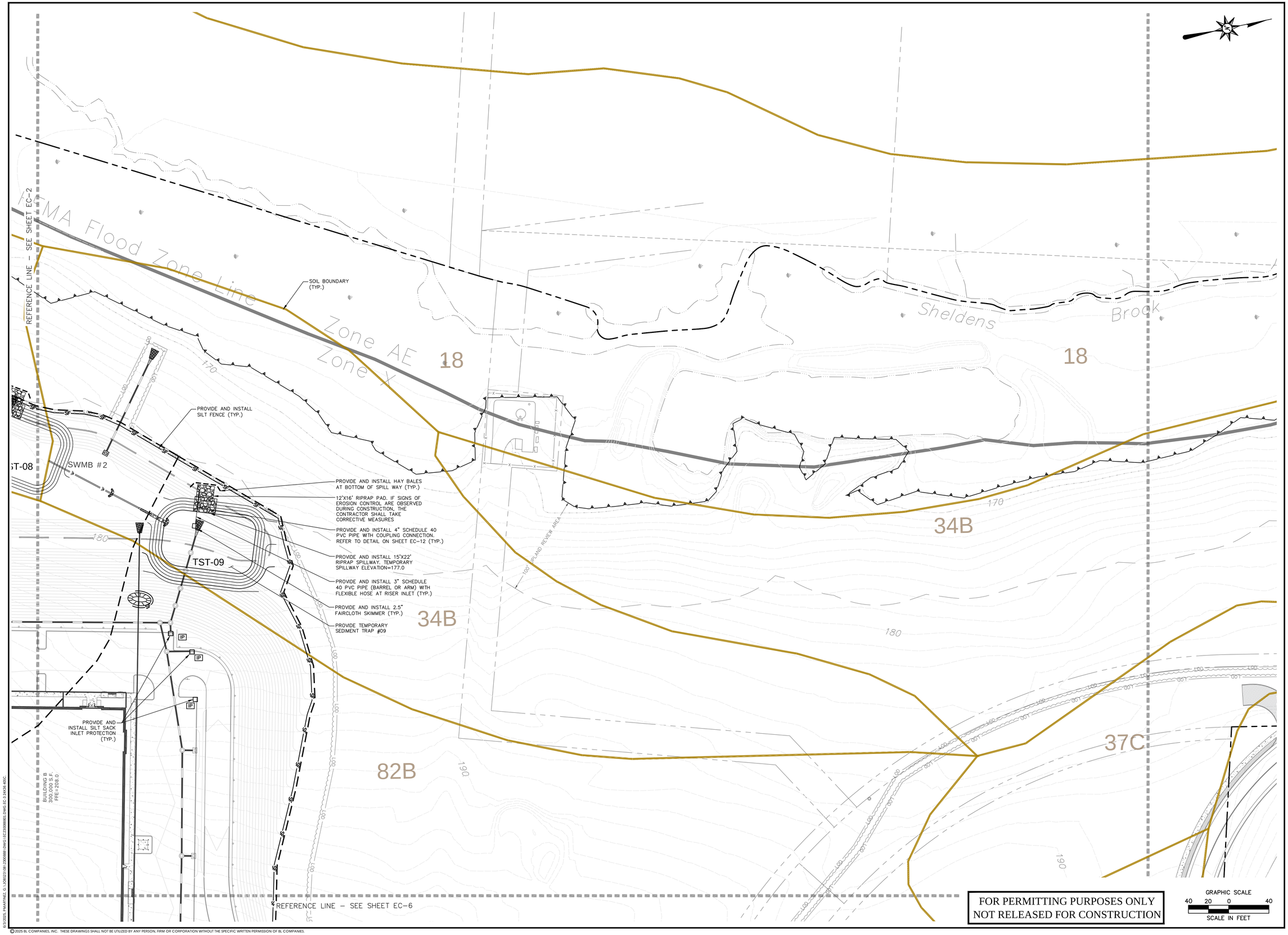

Architecture
Engineering
Environmental
Land Surveying

BL Companies

100 Constitution Plaza
10th Floor
Hartford, CT 06103
(860) 249-2200

STATE OF CONNECTICUT
TIMOTHY A. HOLLISTER
3817
LICENSED PROFESSIONAL ENGINEER

PROPOSED MANUFACTURING / INDUSTRIAL DEVELOPMENT

50-58 RAINBOW ROAD
EAST GRANBY, CONNECTICUT 06026

REVISIONS

No.	Date	Desc.

Designed	P.G.M.
Drawn	P.G.M.
Reviewed	T.A.H.
Scale	1"=40'
Project No.	2300888
Date	06/03/2025
CAD File: EC230088801	

Title

SEDIMENT AND EROSION CONTROL PLAN

Sheet No.

EC-3

Xref: D:\BD2300088801_XC2230088801_XC2300088801_XC2300088802_XC2300088805_XC2300088901_XC2300088901_XC2300088901

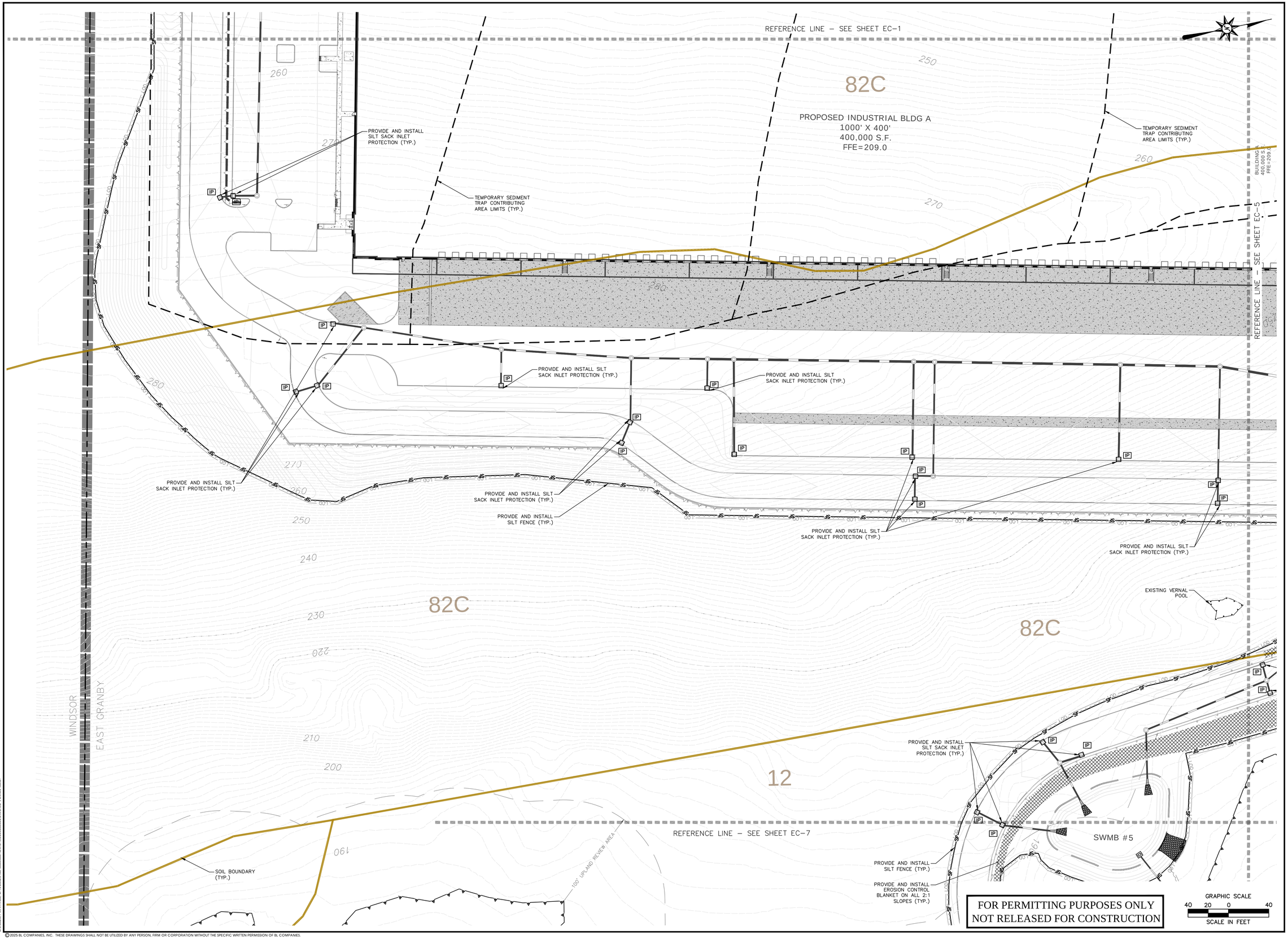

Architecture
Engineering
Environmental
Land Surveying

BL Companies

100 Constitution Plaza
10th Floor
Hartford, CT 06103
(860) 249-2200

STATE OF CONNECTICUT
TIMOTHY A. HOUSE
25117
LICENSED PROFESSIONAL ENGINEER

PROPOSED MANUFACTURING / INDUSTRIAL DEVELOPMENT

50-58 RAINBOW ROAD
EAST GRANBY, CONNECTICUT 06026

REVISIONS

No.	Date	Desc.

Designed	P.G.M.
Drawn	P.G.M.
Reviewed	T.A.H.
Scale	1"=40'
Project No.	2300888
Date	06/03/2025
CAD File:	EC230088801

Title

SEDIMENT AND EROSION CONTROL PLAN

Sheet No.

EC-4

Xref (s) - BD230088801, X2230088801, XC230088801, XC230088802, XC230088805, XY200203701, 2024-2832 HWY, 0518-101 Preliminary

© 2025 BL COMPANIES, INC. THESE DRAWINGS SHALL NOT BE UTILIZED BY ANY PERSON, FIRM OR CORPORATION WITHOUT THE SPECIFIC WRITTEN PERMISSION OF BL COMPANIES.

6/3/2025, PKAMYNEC, G:\CIVIL\2023\0518\230088801\DWG\EC230088801.DWG EC-4 24X36 ARC

REFERENCE LINE – SEE SHEET EC-2

REFERENCE LINE – SEE SHEET EC-4

REFERENCE LINE – SEE SHEET EC-6

REFERENCE LINE – SEE SHEET EC-7

REFERENCE LINE – SEE SHEET EC-8

82C

82B

12

PROPOSED INDUSTRIAL BLDG B
937.5' X 320'
300,000 S.F.
FFE=208.0

BUILDING A
400,000 S.F.
FFE=209.0

BUILDING B
300,000 S.F.
FFE=208.0

PROVIDE AND INSTALL SILT SACK INLET PROTECTION (TYP.)

PROVIDE AND INSTALL SILT SACK INLET PROTECTION (TYP.)

PROVIDE AND INSTALL SILT SACK INLET PROTECTION (TYP.)

PROVIDE AND INSTALL SILT SACK INLET PROTECTION (TYP.)

PROVIDE AND INSTALL SILT SACK INLET PROTECTION (TYP.)

PROVIDE AND INSTALL SILT SACK INLET PROTECTION (TYP.)

PROVIDE AND INSTALL SILT SACK INLET PROTECTION (TYP.)

PROVIDE AND INSTALL SILT SACK INLET PROTECTION (TYP.)

PROVIDE AND INSTALL SILT SACK INLET PROTECTION (TYP.)

PROVIDE AND INSTALL SILT SACK INLET PROTECTION (TYP.)

PROVIDE AND INSTALL SILT SACK INLET PROTECTION (TYP.)

PROVIDE AND INSTALL SILT SACK INLET PROTECTION (TYP.)

PROVIDE AND INSTALL CONCRETE WASH PIT

PROVIDE AND INSTALL SILT FENCE (TYP.)

PROVIDE AND INSTALL EROSION CONTROL BLANKET ON ALL 2:1 SLOPES (TYP.)

SOIL BOUNDARY (TYP.)

PROVIDE AND INSTALL SILT FENCE (TYP.)

PROVIDE TEMPORARY SEDIMENT TRAP #13

PROVIDE AND INSTALL 2.5" FAIRCLOTH SKIMMER (TYP.)

PROVIDE AND INSTALL 15'X22' RIPRAP SPILLWAY, TEMPORARY SPILLWAY ELEVATION=196.0

12'X16' RIPRAP PAD. IF SIGNS OF EROSION CONTROL ARE OBSERVED DURING CONSTRUCTION, THE CONTRACTOR SHALL TAKE CORRECTIVE MEASURES

PROVIDE AND INSTALL HAY BALES AT BOTTOM OF SPILL WAY (TYP.)

100' UPLAND REVIEW AREA

PROVIDE AND INSTALL 3" SCHEDULE 40 PVC PIPE (BARREL OR ARM) WITH FLEXIBLE HOSE AT RISER INLET (TYP.)

PROVIDE AND INSTALL 4" SCHEDULE 40 PVC PIPE WITH COUPLING CONNECTION. REFER TO DETAIL ON SHEET EC-12 (TYP.)

TEMPORARY STOCKPILE WITH SILT FENCE FOR SEDIMENT TRAP SEDIMENT DEWATERING (TYP.)

PROVIDE AND INSTALL RIPRAP CHANNEL PROTECTION AND STONE CHECK DAM (TYP.)

STONE CHECK DAM IN TEMPORARY DIVERSION SWALES 100' O.C. (TYP.)

TEMPORARY DIVERSION SWALES (TYP.)

TEMPORARY SEDIMENT TRAP CONTRIBUTING AREA LIMITS (TYP.)

TST-13

TST-14

SWMB #3

PROVIDE AND INSTALL SILT FENCE (TYP.)

PROVIDE TEMPORARY SEDIMENT TRAP #14

PROVIDE AND INSTALL 15'X22' RIPRAP SPILLWAY, TEMPORARY SPILLWAY ELEVATION=185.0

12'X16' RIPRAP PAD. IF SIGNS OF EROSION CONTROL ARE OBSERVED DURING CONSTRUCTION, THE CONTRACTOR SHALL TAKE CORRECTIVE MEASURES

EXISTING WETLAND LIMITS (TYP.)

EXISTING WETLAND LIMITS (TYP.)

PROVIDE AND INSTALL SILT SACK INLET PROTECTION (TYP.)

PROVIDE AND INSTALL EROSION CONTROL BLANKET ON ALL 2:1 SLOPES (TYP.)

PROVIDE AND INSTALL SILT SACK INLET PROTECTION (TYP.)

FOR PERMITTING PURPOSES ONLY
NOT RELEASED FOR CONSTRUCTION

GRAPHIC SCALE
40 20 0 40
SCALE IN FEET

© 2025 BL COMPANIES, INC. THESE DRAWINGS SHALL NOT BE UTILIZED BY ANY PERSON, FIRM OR CORPORATION WITHOUT THE SPECIFIC WRITTEN PERMISSION OF BL COMPANIES.

Architecture
Engineering
Environmental
Land Surveying

BL Companies

100 Constitution Plaza
10th Floor
Hartford, CT 06103
(860) 249-2200

STATE OF CONNECTICUT
TIMOTHY A. HOUSE
3817
LICENSED PROFESSIONAL ENGINEER

PROPOSED MANUFACTURING / INDUSTRIAL DEVELOPMENT

50-58 RAINBOW ROAD
EAST GRANBY, CONNECTICUT 06026

REVISIONS

No.	Date	Desc.

Designed	P.G.M.
Drawn	P.G.M.
Reviewed	T.A.H.
Scale	1"=40'
Project No.	2300888
Date	06/03/2025
CAD File: EC230088801	

Title

SEDIMENT AND EROSION CONTROL PLAN

Sheet No.

EC-5

Xref (s) : B0230088801 , XC230088801 , XC230088802 , XC230088805 , XY200029701 , 2024-2832-HWY , 0518-101 Preliminary

6/3/2025, SMARTINEZ, G:\1_PROJECTS\B\2300888\1_DWG\EC\EC230088801.DWG EC-5 24X36 ARCH

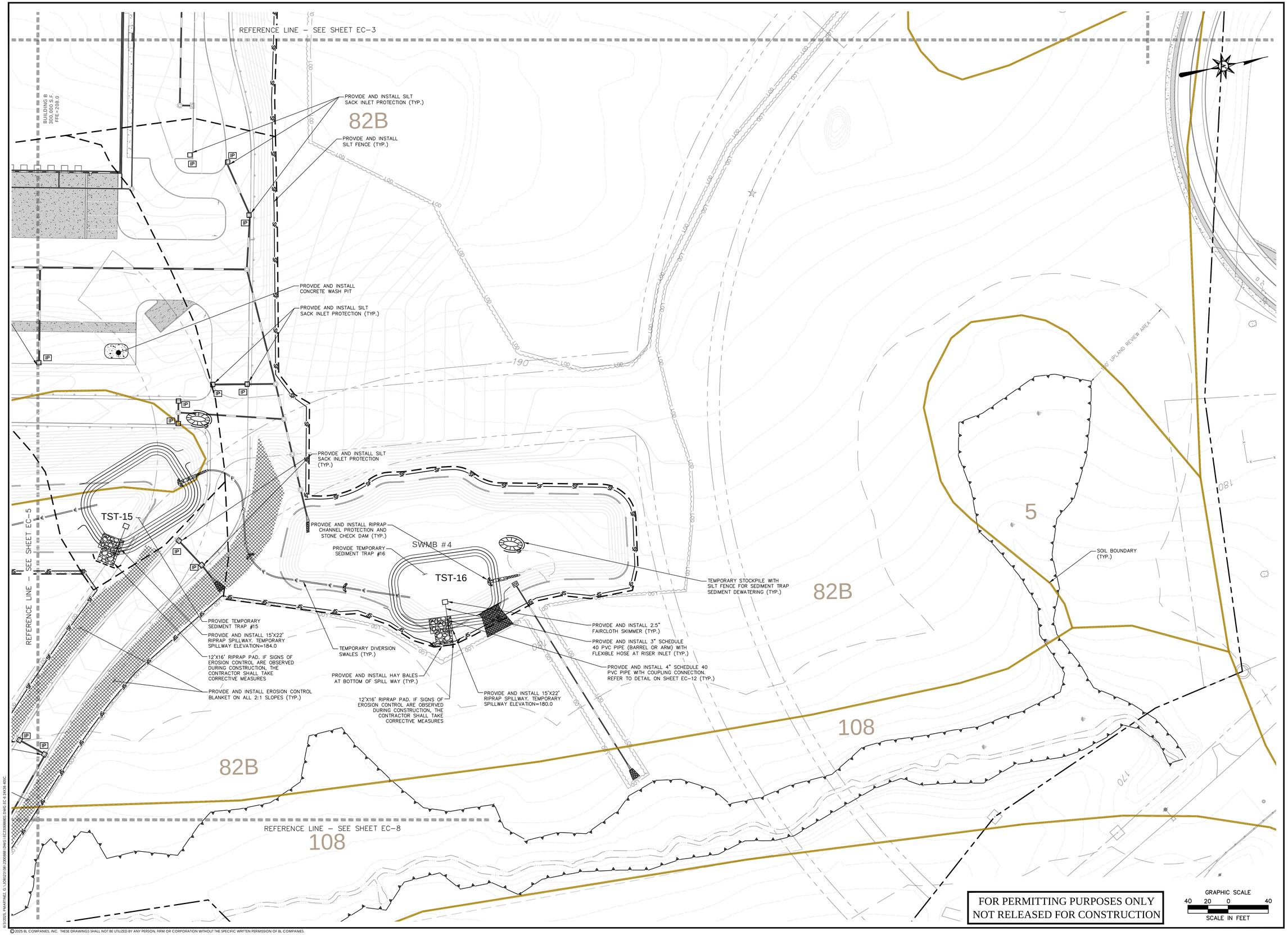

FOR PERMITTING PURPOSES ONLY
NOT RELEASED FOR CONSTRUCTION

© 2025 BL COMPANIES, INC. THESE DRAWINGS SHALL NOT BE UTILIZED BY ANY PERSON, FIRM OR CORPORATION WITHOUT THE SPECIFIC WRITTEN PERMISSION OF BL COMPANIES.

Architecture
Engineering
Environmental
Land Surveying
BL Companies

100 Constitution Plaza
10th Floor
Hartford, CT 06103
(860) 249-2200

STATE OF CONNECTICUT
TIMOTHY A. HOULE
36117
LICENSED
PROFESSIONAL ENGINEER

PROPOSED MANUFACTURING / INDUSTRIAL DEVELOPMENT
50-58 RAINBOW ROAD
EAST GRANBY, CONNECTICUT 06026

REVISIONS

No.	Date	Desc.

Designed	P.G.M.
Drawn	P.G.M.
Reviewed	T.A.H.
Scale	1"=40'
Project No.	2300888
Date	06/03/2025
CAD File:	EC230088801

Title

SEDIMENT AND EROSION CONTROL PLAN

Sheet No.

EC-6

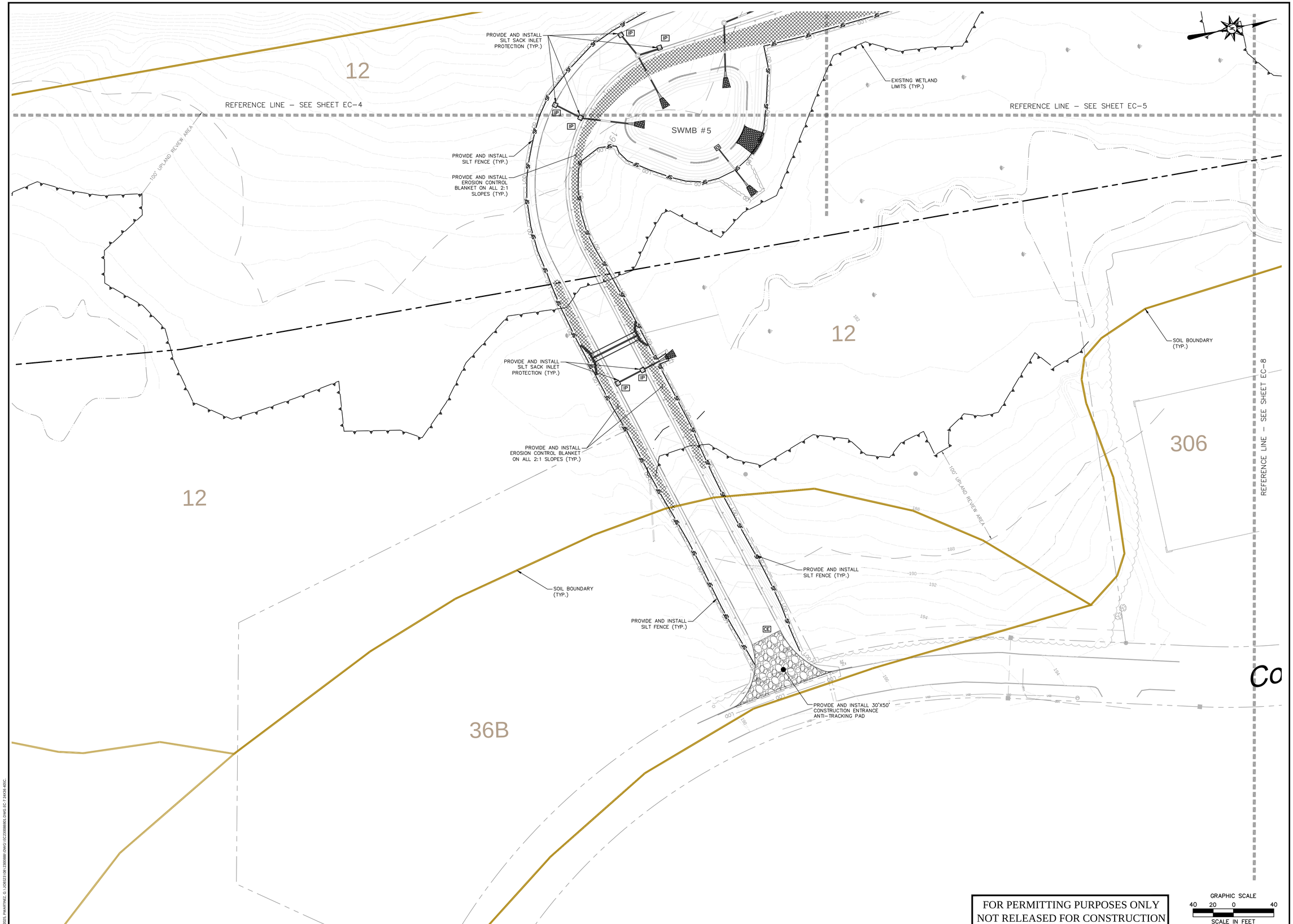

FOR PERMITTING PURPOSES ONLY
NOT RELEASED FOR CONSTRUCTION

GRAPHIC SCALE
40 20 0 40
SCALE IN FEET

Architecture
Engineering
Environmental
Land Surveying
BL Companies

100 Constitution Plaza
10th Floor
Hartford, CT 06103
(860) 249-2200

STATE OF CONNECTICUT
TIMOTHY A. HOULE
38117
LICENSED
PROFESSIONAL ENGINEER

PROPOSED MANUFACTURING / INDUSTRIAL DEVELOPMENT

50-58 RAINBOW ROAD
EAST GRANBY, CONNECTICUT 06026

REVISIONS

No.	Date	Desc.

Designed	P.G.M.
Drawn	P.G.M.
Reviewed	T.A.H.
Scale	1"=40'
Project No.	2300888
Date	06/03/2025
CAD File:	EC230088801

Title

SEDIMENT AND EROSION CONTROL PLAN

Sheet No.

EC-7

Xref (s): ; BD230088801 ; XC230088801 ; XC230088802 ; XC230088805 ; XC230088803 ; XY200203701 ; 2024-2832 HWY ; 0518-101 Preliminary

6/3/2025, PMARTINEZ, G:\JOBS23\08\2300888\DWG\EC230088801.DWG EC-7 24X36 40SC.

© 2025 BL COMPANIES, INC. THESE DRAWINGS SHALL NOT BE UTILIZED BY ANY PERSON, FIRM OR CORPORATION WITHOUT THE SPECIFIC WRITTEN PERMISSION OF BL COMPANIES.

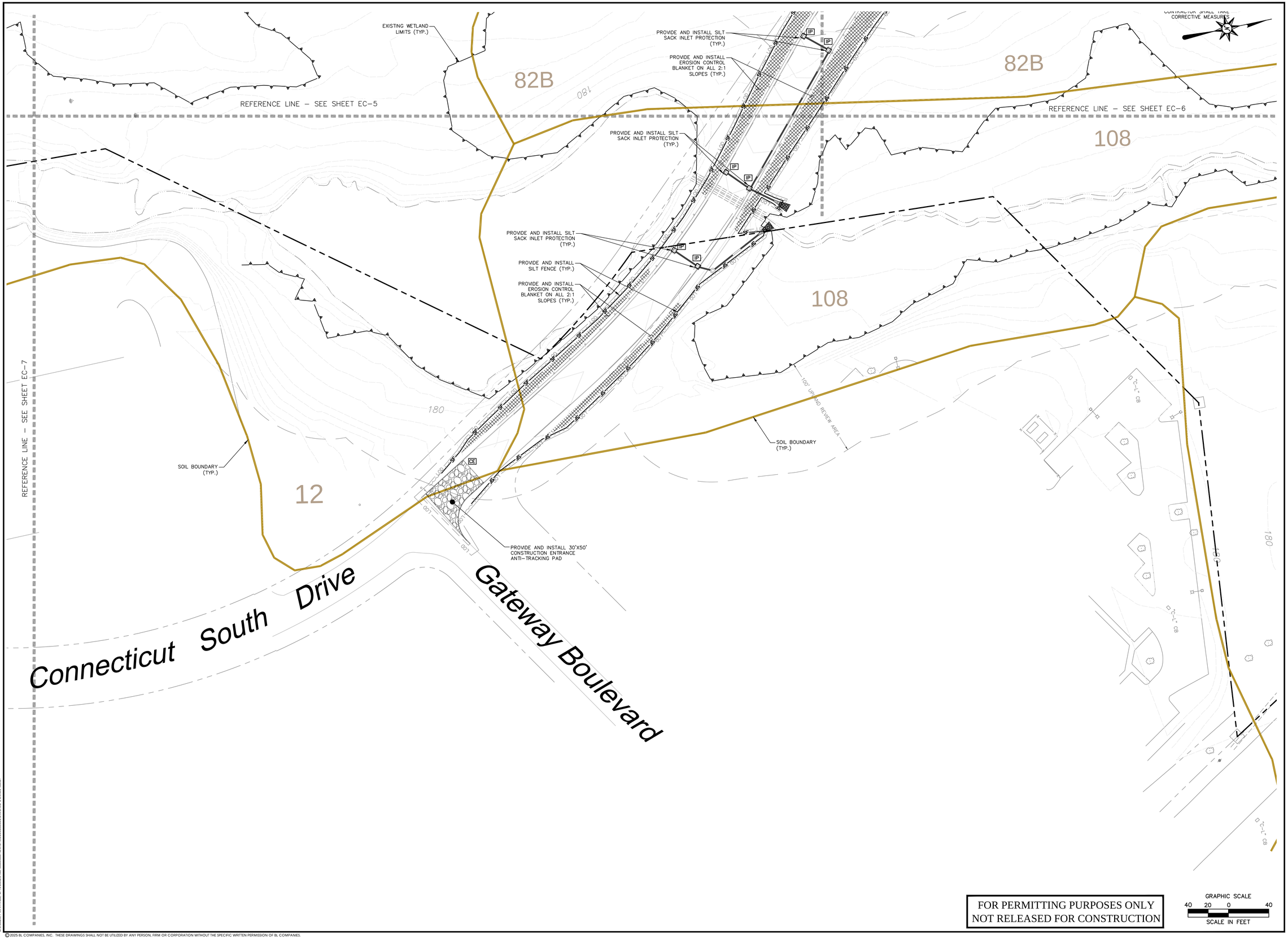

FOR PERMITTING PURPOSES ONLY
NOT RELEASED FOR CONSTRUCTION

GRAPHIC SCALE
40 20 0 40
SCALE IN FEET

© 2025 BL COMPANIES, INC. THESE DRAWINGS SHALL NOT BE UTILIZED BY ANY PERSON, FIRM OR CORPORATION WITHOUT THE SPECIFIC WRITTEN PERMISSION OF BL COMPANIES.

Architecture
Engineering
Environmental
Land Surveying

BL Companies

100 Constitution Plaza
10th Floor
Hartford, CT 06103
(860) 249-2200

STATE OF CONNECTICUT
TIMOTHY A. HOLLY
3817
LICENSED PROFESSIONAL ENGINEER

PROPOSED MANUFACTURING / INDUSTRIAL DEVELOPMENT
50-58 RAINBOW ROAD
EAST GRANBY, CONNECTICUT 06026

REVISIONS
No. Date Desc.

Designed	M.A.G
Drawn	M.A.G
Reviewed	INITIALS
Scale	SCALE
Project No.	2300888
Date	06/03/2025

CAD File: EC230088801

Title
SEDIMENT AND EROSION CONTROL PLAN

Sheet No.
EC-8

W:\#_BD\2300888\01_NZ\2300888801_XC\2300888802_XC\2300888805_XC\D20250701_2024-2824 HWY (051-101) Preliminary\
6/3/2025, RAMATHIE, G:\JOBS\23\00\2300888\DWGS\EC2300888801.DWG, EC-8 ANSI B ARCH

SEDIMENT AND EROSION CONTROL NOTES

SEDIMENT AND EROSION CONTROL NOTES – CONNECTICUT

SEDIMENT & EROSION CONTROL NARRATIVE
THE SEDIMENT AND EROSION CONTROL PLAN WAS DEVELOPED TO PROTECT THE EXISTING ROADWAY AND STORM DRAINAGE SYSTEMS, ADJACENT PROPERTIES, AND ANY ADJACENT WETLAND AREA AND ANY ADJACENT WATER COURSE FROM SEDIMENT LADEN SURFACE RUNOFF AND EROSION. A CONSTRUCTION SEQUENCE IS PROVIDED TO PROVIDE SURFACE RUNOFF EROSION CONTROLS PRIOR TO THE BEGINNING OF PROJECT DEMOLITION AND/OR CONSTRUCTION.

CONSTRUCTION SCHEDULE
THE ANTICIPATED STARTING DATE FOR CONSTRUCTION IS SPRING 2027 WITH COMPLETION ANTICIPATED SPRING 2028. APPROPRIATE SEDIMENT AND EROSION CONTROL MEASURES AS DESCRIBED HEREIN SHALL BE INSTALLED BY THE CONTRACTOR PRIOR TO THE COMMENCEMENT OF ALL DEMOLITION OR CONSTRUCTION ACTIVITY. SCHEDULE WORK TO MINIMIZE THE LENGTH OF TIME THAT BARE SOIL WILL BE EXPOSED.

CONTINGENCY EROSION PLAN
THE CONTRACTOR SHALL INSTALL ALL SPECIFIED SEDIMENT AND EROSION CONTROL MEASURES AND WILL BE REQUIRED TO MAINTAIN THEM IN THEIR INTENDED FUNCTIONING CONDITION. THE AGENTS OF THE MUNICIPALITY AND/OR INLAND WETLANDS COMMISSION AND/OR CIVIL ENGINEER SHALL HAVE THE AUTHORITY TO REQUIRE SUPPLEMENTAL MAINTENANCE OR ADDITIONAL MEASURES IF FIELD CONDITIONS ARE ENCOUNTERED BEYOND WHAT WOULD NORMALLY BE ANTICIPATED.

CONSTRUCTION SEQUENCE
THE FOLLOWING CONSTRUCTION SEQUENCE IS RECOMMENDED:

1. CONTACT MUNICIPALITY AND/OR INLAND WETLANDS COMMISSION AGENT AT LEAST FORTY-EIGHT (48) HOURS PRIOR TO COMMENCEMENT OF ANY DEMOLITION, CONSTRUCTION OR REGULATED ACTIVITY ON THIS PROJECT.
2. CLEARING LIMITS SHALL BE PHYSICALLY MARKED IN THE FIELD AND APPROVED BY THE MUNICIPALITY AND/OR INLAND WETLANDS COMMISSION AGENT PRIOR TO THE START OF WORK ON THE SITE. INSTALL TREE PROTECTION AND PERIMETER SILT FENCE.
3. CONSTRUCT STONE CONSTRUCTION ENTRANCE ANTI-TRACKING PADS AT CONSTRUCTION ENTRANCES/EXITS AND INSTALL FILTER FABRIC AROUND GRATES OF CATCH BASINS OR INSTALL SILT SACKS ON CATCH BASIN INLETS ON OFF SITE ROADS. INSTALL SILT FENCE AND OTHER EROSION CONTROL DEVICES INDICATED ON THESE PLANS AT PERIMETER OF PROPOSED SITE DISTURBANCE AND INSTALL ALL EROSION CONTROL MEASURES AND TREE PROTECTION INDICATED ON THESE PLANS. INSTALL SEDIMENT BASINS AND SEDIMENT TRAPS IF REQUIRED AT LOW AREAS OF SITE OR AS ORDERED BY THE ENGINEER OR AS SHOWN ON THESE PLANS.
4. CLEAR AND GRUB SITE. STOCKPILE CHIPS. STOCKPILE TOPSOIL. INSTALL SEDIMENT AND EROSION CONTROLS AT STOCKPILES.
5. BUILDING AND SITE DEMOLITION AND REMOVAL. PAVEMENT REMOVAL.
6. INSTALL SILT FENCE, CONSTRUCT DIVERSION SWALES AND SEDIMENT TRAPS. COMMENCE INSTALLATION OF STORM DRAINAGE SYSTEM.
7. COMMENCE EARTHWORK. CONSTRUCT FILL SLOPE, ROADWAY, AND RETAINING WALLS. INSTALL ADDITIONAL SEDIMENT AND EROSION CONTROLS AS WORK PROGRESSES AND CONTINUE STORM DRAINAGE SYSTEM CONSTRUCTION, TOPSOIL AND SEED SLOPES WHICH HAVE ACHIEVED FINAL SITE GRADING.
8. CONSTRUCTION STAKING OF ALL BUILDING CORNERS, UTILITIES, ACCESS DRIVES, AND PARKING AREAS.
9. ROUGH GRADING AND FILLING OF SUBGRADES AND SLOPES.
10. IMMEDIATELY UPON DISCOVERING UNFORESEEN CIRCUMSTANCES POSING THE POTENTIAL FOR ACCELERATED EROSION AND/OR SEDIMENT POLLUTION, THE OPERATOR SHALL IMPLEMENT APPROPRIATE BEST MANAGEMENT PRACTICES TO ELIMINATE THE POTENTIAL FOR ACCELERATED EROSION AND/OR SEDIMENT POLLUTION.
11. BEFORE DISPOSING OF SOIL OR RECEIVING BORROW FOR THE SITE, THE CONTRACTOR MUST PROVIDE EVIDENCE THAT EACH SPOIL OR BORROW AREA HAS A SEDIMENT AND EROSION CONTROL PLAN APPROVED BY THE MUNICIPALITY AND/OR INLAND WETLANDS COMMISSION AND WHICH IS BEING IMPLEMENTED AND MAINTAINED. THE CONTRACTOR SHALL ALSO NOTIFY THE MUNICIPALITY AND/OR INLAND WETLANDS COMMISSION IN WRITING OF ALL RECEIVING SPOIL AND BORROW AREAS WHEN THEY HAVE BEEN IDENTIFIED.
12. CONTINUE INSTALLATION OF STORM DRAINAGE AS SUBGRADE ELEVATIONS ARE ACHIEVED.
13. BUILDING FOUNDATION SUBGRADE AND PAD SUBGRADE PREPARATION.
14. BUILDING FOUNDATION CONSTRUCTION. BEGIN BUILDING SUPERSTRUCTURE
15. THROUGHOUT CONSTRUCTION SEQUENCE, REMOVE SEDIMENT FROM BEHIND SILT FENCES, HAY BALES AND OTHER EROSION CONTROL DEVICES, AND FROM SEDIMENT BASINS AND SEDIMENT TRAPS AS REQUIRED. REMOVAL SHALL BE ON A PERIODIC BASIS (EVERY SIGNIFICANT RAINFALL OF 0.25 INCH OR GREATER). INSPECTION OF SEDIMENT AND EROSION CONTROL MEASURES SHALL BE ON A WEEKLY BASIS AND AFTER EACH RAINFALL OF 0.25 INCHES OR GREATER. SEDIMENT COLLECTED SHALL BE DEPOSITED AND SPREAD EVENLY UPLAND ON SLOPES DURING CONSTRUCTION.
16. INSTALL SANITARY LATERAL AND UTILITIES. COMPLETE STORM DRAINAGE SYSTEM.
17. INSTALL SITE LIGHTING AND TRASH ENCLOSURE.
18. COMPLETE GRADING TO SUBGRADES AND CONSTRUCT PARKING AREA SUBGRADE.
19. CONSTRUCT CURBS, PAVEMENT STRUCTURE AND SIDEWALKS.
20. CONDUCT FINE GRADING.
21. PAVING OF PARKING AREAS AND DRIVEWAYS
22. FINAL FINE GRADING OF SLOPE AND NON-PAVED AREAS.
23. PLACE 4" TOPSOIL ON SLOPES AFTER FINAL GRADING IS COMPLETED. FERTILIZE SEED AND MULCH. SEED MIXTURE TO BE INSTALLED AUGUST 15-OCTOBER 1. USE EROSION CONTROL BLANKETS AS REQUIRED OR ORDERED FOR SLOPES GREATER THAN 3:1 AND AS SHOWN ON LANDSCAPE PLANS OR EROSION CONTROL PLANS. FOR TEMPORARY STABILIZATION BEYOND SEEDING DATES USE ANNUAL RYE AT 4.0 LBS/1,000 S.F. FERTILIZE WITH 10-10-10 AT 1.0 LBS. OF NITROGEN PER 1,000 S.F. AND LIME AT 100 LBS/1,000 S.F. (MAX.).
24. LANDSCAPE ISLANDS, INTERIOR NON-PAVED AREAS, AND PERIMETER AREAS.
25. INSTALL SIGNING AND PAVEMENT MARKINGS
26. CLEAN STORM DRAINAGE PIPE STRUCTURES, DETENTION SYSTEMS AND WATER QUALITY DEVICES OF DEBRIS AND SEDIMENT.
27. UPON DIRECTION OF THE MUNICIPAILITY AND/OR INLAND WETLANDS COMMISSION AGENT, SEDIMENT AND EROSION CONTROL MEASURES SHALL BE REMOVED FOLLOWING STABILIZATION OF THE SITE.

OPERATION REQUIREMENTS

CLEARING AND GRUBBING OPERATIONS
1. ALL SEDIMENT AND EROSION CONTROL MEASURES, INCLUDING THE CONSTRUCTION OF TEMPORARY SEDIMENTATION BASINS AND STONE CONSTRUCTION ENTRANCE ANTI-TRACKING PADS, WILL BE INSTALLED PRIOR TO THE START OF CLEARING AND GRUBBING AND DEMOLITION OPERATIONS.
2. FOLLOWING INSTALLATION OF ALL SEDIMENT AND EROSION CONTROL MEASURES, THE CONTRACTOR SHALL NOT PROCEED WITH GRADING, FILLING OR OTHER CONSTRUCTION OPERATIONS UNTIL THE ENGINEER HAS INSPECTED AND APPROVED ALL INSTALLATIONS.
3. THE CONTRACTOR SHALL TAKE EXTREME CARE DURING CLEARING AND GRUBBING OPERATIONS SO AS NOT TO DISTURB UNPROTECTED WETLAND AREAS OR SEDIMENT AND EROSION CONTROL DEVICES.
4. FOLLOWING THE COMPLETION OF CLEARING AND GRUBBING OPERATIONS, ALL AREAS SHALL BE STABILIZED WITH TOPSOIL AND SEEDING OR CRUSHED STONE AS SOON AS PRACTICAL.

ROUGH GRADING OPERATIONS

1. DURING THE REMOVAL AND/OR PLACEMENT OF EARTH AS INDICATED ON THE GRADING PLAN, TOPSOIL SHALL BE STRIPPED AND APPROPRIATELY STOCKPILED FOR REUSE.
2. ALL STOCKPILED TOPSOIL SHALL BE SEEDED, MULCHED WITH HAY, AND ENCLOSED BY A SILTATION FENCE.

FILLING OPERATIONS

1. PRIOR TO FILLING, ALL SEDIMENT AND EROSION CONTROL DEVICES SHALL BE PROPERLY IMPLEMENTED, MAINTAINED AND FULLY INSTALLED, AS DIRECTED BY THE ENGINEER AND AS SHOWN ON THIS PLAN.
2. ALL FILL MATERIAL ADJACENT TO ANY WETLAND AREAS, IF APPLICABLE TO THIS PROJECT, SHALL BE GOOD QUALITY, WITH LESS THAN 5% FINES PASSING THROUGH A #200 SIEVE (BANK RUN), SHALL BE PLACED IN LIFT THICKNESSES NOT GREATER THAN THAT SPECIFIED IN PROJECT SPECIFICATIONS AND/OR THE PROJECT GEOTECHNICAL REPORT. LIFTS SHALL BE COMPACTED TO 95% MAX. DRY DENSITY MODIFIED PROCTOR OR AS SPECIFIED IN THE CONTRACT SPECIFICATIONS OR IN THE GEOTECHNICAL REPORT.
3. AS GENERAL GRADING OPERATIONS PROGRESS, ANY TEMPORARY DIVERSION DITCHES SHALL BE RAISED OR LOWERED, AS NECESSARY, TO DIVERT SURFACE RUNOFF TO THE SEDIMENT BASINS OR SEDIMENT TRAPS.

PLACEMENT OF DRAINAGE STRUCTURES, UTILITIES, AND BUILDING CONSTRUCTION OPERATIONS.

1. SILT FENCES SHALL BE INSTALLED AT THE DOWNHILL SIDES OF BUILDING EXCAVATIONS, MUD PUMP DISCHARGES, AND UTILITY TRENCH MATERIAL STOCKPILES. HAY BALES/STRAW BALES MAY BE USED IF SHOWN ON THE SEDIMENT AND EROSION CONTROL PLANS OR IF DIRECTED BY THE CIVIL ENGINEER.

FINAL GRADING AND PAVING OPERATIONS

1. ALL INLET AND OUTLET PROTECTION SHALL BE PLACED AND MAINTAINED AS SHOWN ON SEDIMENT AND EROSION CONTROL PLANS AND DETAILS, AND AS DESCRIBED IN SPECIFICATIONS AND AS DESCRIBED HEREIN.
2. NO CUT OR FILL SLOPES SHALL EXCEED 2:1 EXCEPT WHERE STABILIZED BY ROCK FACED EMBANKMENTS OR EROSION CONTROL BLANKETS, OR JUTE MESH AND VEGETATION. ALL SLOPES SHALL BE SEEDED, AND ANY ROAD OR DRIVEWAY SHOULDER AND BANKS SHALL BE STABILIZED IMMEDIATELY UPON COMPLETION OF FINAL GRADING UNTIL TURF IS ESTABLISHED.
3. PAVEMENT SUB-BASE AND BASE COURSES SHALL BE INSTALLED OVER AREAS TO BE PAVED AS SOON AS FINAL SUB-GRADES ARE ESTABLISHED AND UNDERGROUND UTILITIES AND STORM DRAINAGE SYSTEMS HAVE BEEN INSTALLED.
4. AFTER CONSTRUCTION OF PAVEMENT, TOPSOIL, FINAL SEED, MULCH AND LANDSCAPING, REMOVE ALL TEMPORARY SEDIMENT AND EROSION CONTROL DEVICES ONLY AFTER ALL AREAS HAVE BEEN PAVED AND/OR GRASS HAS BEEN WELL ESTABLISHED AND THE SITE IS STABLE AND HAS BEEN INSPECTED AND APPROVED BY THE MUNICIPALITY AND/OR INLAND WETLANDS COMMISSION.

INSTALLATION OF SEDIMENTATION AND EROSION CONTROL MEASURES

I. SILTATION FENCE
A. DIG A SIX INCH TRENCH ON THE UPHILL SIDE OF THE DESIGNATED FENCE LINE LOCATION.

B. POSITION THE POST AT THE BACK OF THE TRENCH (DOWNHILL SIDE), AND HAMMER THE POST AT LEAST 1.5 FEET INTO THE GROUND.

C. LAY THE BOTTOM SIX INCHES OF THE FABRIC INTO THE TRENCH TO PREVENT UNDERMINING BY STORM WATER RUN-OFF.

D. BACKFILL THE TRENCH AND COMPACT.

II. HAY BALES/STRAW BALES
A. BALES SHALL BE PLACED IN A SINGLE ROW, LENGTHWISE, ORIENTED PARALLEL TO THE CONTOUR, WITH ENDS OF ADJACENT BALES TIGHTLY ABUTTING ONE ANOTHER.

B. BALES SHALL BE ENTRENCHED AND BACKFILLED. A TRENCH SHALL BE EXCAVATED THE WIDTH OF A BALE AND THE LENGTH OF THE PROPOSED BARRIER TO A MINIMUM DEPTH OF FOUR INCHES. AFTER THE BALES ARE STAKED, THE EXCAVATED SOIL SHALL BE BACKFILLED AGAINST THE BARRIER.

C. EACH BALE SHALL BE SECURELY ANCHORED BY AT LEAST TWO (2) STAKES.

D. THE GAPS BETWEEN BALES SHALL BE WEDGED WITH STRAW TO PREVENT WATER LEAKAGE.

E. THE BARRIER SHALL BE EXTENDED TO SUCH A LENGTH THAT THE BOTTOMS OF THE END BALES ARE HIGHER IN ELEVATION THAN THE TOP OF THE LOWEST MIDDLE BALE, TO ENSURE THAT RUN-OFF WILL FLOW EITHER THROUGH OR OVER THE BARRIER, BUT NOT AROUND IT.

OPERATION AND MAINTENANCE OF SEDIMENT AND EROSION CONTROL MEASURES
I. SILTATION FENCE
A. ALL SILTATION FENCES SHALL BE INSPECTED AS A MINIMUM WEEKLY OR AFTER EACH RAINFALL. ALL DETERIORATED FABRIC AND DAMAGED POSTS SHALL BE REPLACED AND PROPERLY REPOSITIONED IN ACCORDANCE WITH THIS PLAN.

B. SEDIMENT DEPOSITS SHALL BE REMOVED FROM BEHIND THE FENCE WHEN THEY REACH A MAXIMUM HEIGHT OF ONE FOOT.

II. HAY BALES/STRAW BALES
A. ALL HAY BALE/STRAW BALE RINGS SHALL BE INSPECTED FOLLOWING EACH RAINFALL. REPAIR OR REPLACEMENT SHALL BE PROMPTLY MADE AS NEEDED.

B. DEPOSITS SHALL BE REMOVED AND CLEANED-OUT IF ONE HALF OF THE ORIGINAL HEIGHT OF THE BALES BECOMES FILLED WITH SEDIMENT.

III. SEDIMENT BASINS/SEDIMENT TRAPS
A. CONTRACTOR TO KEEP WEEKLY CHECKLIST LOGS FOR INSPECTIONS OF ALL SEDIMENT AND EROSION CONTROL DEVICES AND HAVE THEM READILY AVAILABLE ON-SITE AT ALL TIMES FOR INSPECTION BY CTDEEP LOCAL AUTHORITIES OR ENGINEER.

B. ALL SEDIMENT BASINS AND/OR SEDIMENT TRAPS SHALL BE INSPECTED FOLLOWING EACH RAINFALL. REPAIR OF SLOPES SHALL BE PROMPTLY MADE AS NEEDED.

C. SEDIMENT DEPOSITS SHALL BE REMOVED FROM SEDIMENT BASINS AND/OR SEDIMENT TRAPS WHEN THEY REACH A MAXIMUM HEIGHT OF ONE FOOT UNLESS OTHERWISE INDICATED ON THE EROSION CONTROL PLANS AND DETAILS TO BE AT A SPECIFIC ELEVATION PER CLEAN OUT MARKERS.

D. SEDIMENT SHALL BE DISPOSED OF ON-SITE OR AS DIRECTED BY THE ENGINEER AND LOCAL GOVERNING OFFICIALS. SEE SEDIMENT AND EROSION CONTROL NOTES HEREIN REGARDING DISPOSAL REQUIREMENTS FOR OFF SITE SPOIL DISPOSAL.

SEDIMENT AND EROSION CONTROL PLAN
1. HAY BALE/STRAW BALE FILTERS WILL BE INSTALLED AT ALL CULVERT OUTLETS IF CULVERT OUTLETS ARE APPLICABLE TO THIS PROJECT AND SILTATION FENCE INSTALLED ALONG THE TOE OF ALL CRITICAL CUT AND FILL SLOPES.
2. CULVERT DISCHARGE AREAS WILL BE PROTECTED WITH RIP RAP CHANNELS. ENERGY DISSIPATORS WILL BE INSTALLED AS SHOWN ON THESE PLANS AND AS NECESSARY.
3. CATCH BASINS WILL BE PROTECTED WITH HAY BALE/STRAW BALE FILTERS, SILT SACKS, SILTATION FENCE, OR OTHER INLET PROTECTION DEVICES PER DETAILS, THROUGHOUT THE CONSTRUCTION PERIOD AND UNTIL ALL DISTURBED AREAS ARE THOROUGHLY STABILIZED.
4. ALL SEDIMENT AND EROSION CONTROL MEASURES WILL BE INSTALLED IN ACCORDANCE WITH THE STANDARDS AND SPECIFICATIONS OF THE 2002 CONNECTICUT GUIDELINES FOR SOIL EROSION AND SEDIMENT CONTROL, LATEST EDITION.
5. SEDIMENT AND EROSION CONTROL MEASURES WILL BE INSTALLED PRIOR TO DEMOLITION AND/OR CONSTRUCTION WHENEVER POSSIBLE.
6. ALL CONTROL MEASURES WILL BE MAINTAINED IN EFFECTIVE CONDITION THROUGHOUT THE DEMOLITION AND CONSTRUCTION PERIOD UNTIL THE SITE IS DETERMINED TO BE STABILIZED BY THE AUTHORITY HAVING JURISDICTION.
7. ADDITIONAL CONTROL MEASURES WILL BE INSTALLED DURING THE CONSTRUCTION PERIOD, IF NECESSARY OR REQUIRED OR AS DIRECTED BY THE CIVIL ENGINEER OR BY THE AUTHORITY HAVING JURISDICTION.
8. SEDIMENT REMOVED FROM EROSION CONTROL STRUCTURES WILL BE DISPOSED IN A MANNER WHICH IS CONSISTENT WITH THE INTENT AND REQUIREMENTS OF THE SEDIMENT AND EROSION CONTROL PLANS, NOTES, AND DETAILS.
9. THE CONTRACTOR IS ASSIGNED THE RESPONSIBILITY FOR IMPLEMENTING THIS SEDIMENT AND EROSION CONTROL PLAN. THIS RESPONSIBILITY INCLUDES THE INSTALLATION AND MAINTENANCE OF CONTROL MEASURES, INFORMING ALL PARTIES ENGAGED ON THE CONSTRUCTION SITE OF THE REQUIREMENTS AND OBJECTIVES OF THE PLAN, NOTIFICATION TO THE MUNICIPALITY AND/OR INLAND WETLANDS COMMISSION OFFICE OR AUTHORITY HAVING JURISDICTION OF ANY TRANSFER OF THIS RESPONSIBILITY AND FOR CONVEYING A COPY OF THE SEDIMENT AND EROSION CONTROL PLAN IF THE TITLE TO THE LAND IS TRANSFERRED.

SEDIMENT AND EROSION CONTROL NOTES
1. THE SEDIMENT AND EROSION CONTROL PLAN IS ONLY INTENDED TO DESCRIBE THE SEDIMENT AND EROSION CONTROL TREATMENT FOR THIS SITE. SEE SEDIMENT AND EROSION CONTROL DETAILS AND CONSTRUCTION SEQUENCE. REFER TO SITE PLAN FOR GENERAL INFORMATION AND OTHER CONTRACT PLANS FOR APPROPRIATE INFORMATION.
2. THE CONTRACTOR IS RESPONSIBLE FOR IMPLEMENTING THIS SEDIMENT AND EROSION CONTROL PLAN. THIS RESPONSIBILITY INCLUDES THE PROPER INSTALLATION AND MAINTENANCE OF SEDIMENT AND EROSION CONTROL MEASURES, INFORMING ALL PARTIES ENGAGED WITH CONSTRUCTION ON THE SITE OF THE REQUIREMENTS AND OBJECTIVES OF THIS PLAN, INFORMING THE AUTHORITY HAVING JURISDICTION OR COUNTY SOILS CONSERVATION DISTRICT OR INLAND WETLANDS AGENCY OF ANY TRANSFER OF THIS RESPONSIBILITY, AND FOR CONVEYING A COPY OF THE SEDIMENT & EROSION CONTROL PLAN IF THE TITLE TO THE LAND IS TRANSFERRED.
3. AN EROSION CONTROL BOND MAY BE REQUIRED TO BE POSTED WITH THE MUNICIPALITY TO ENSURE IMPLEMENTATION OF THE SEDIMENT AND EROSION CONTROL MEASURES. THE CONTRACTOR SHALL BE RESPONSIBLE FOR THE POSTING OF THIS BOND AND FOR INQUIRIES TO THE THE MUNICIPALITY FOR INFORMATION ON THE METHOD, TYPE AND AMOUNT OF THE BOND POSTING UNLESS OTHERWISE DIRECTED BY THE OWNER.
4. VISUAL SITE INSPECTIONS SHALL BE CONDUCTED WEEKLY, AND AFTER EACH MEASURABLE PRECIPITATION EVENT OF 0.25 INCHES OR GREATER BY QUALIFIED PERSONNEL, TRAINED AND EXPERIENCED IN SEDIMENT AND EROSION CONTROL, TO ASCERTAIN THAT THE SEDIMENT AND EROSION CONTROL (E&S) BMPS ARE OPERATIONAL AND EFFECTIVE IN PREVENTING POLLUTION. A WRITTEN REPORT OF EACH INSPECTION SHALL BE KEPT, AND INCLUDE:
A)A SUMMARY OF THE SITE CONDITIONS, E&S BMPS, AND COMPLIANCE; AND
B)THE DATE, TIME, AND THE NAME OF THE PERSON CONDUCTING THE INSPECTION
5. THE CONTRACTOR SHALL CONSTRUCT ALL SEDIMENT AND EROSION CONTROLS IN ACCORDANCE WITH 2002 CONNECTICUT GUIDELINES FOR SOIL EROSION AND SEDIMENT CONTROL, LATEST EDITION IN ACCORDANCE WITH THE CONTRACT DOCUMENTS, AND AS DIRECTED BY THE MUNICIPALITY AND/OR INLAND WETLANDS COMMISSION. THE CONTRACTOR SHALL KEEP A COPY OF THE GUIDELINES ON-SITE FOR REFERENCE DURING CONSTRUCTION.
6. ADDITIONAL AND/OR ALTERNATIVE SEDIMENT AND EROSION CONTROL MEASURES MAY BE INSTALLED DURING THE CONSTRUCTION PERIOD IF FOUND NECESSARY BY THE CONTRACTOR, OWNER, SITE ENGINEER, MUNICIPALITY AND/OR INLAND WETLANDS COMMISSION, OR GOVERNING AGENCIES. THE CONTRACTOR SHALL CONTACT THE OWNER AND APPROPRIATE GOVERNING AGENCIES FOR APPROVAL IF ALTERNATIVE CONTROLS OTHER THAN THOSE SHOWN ON THE PLANS ARE PROPOSED.
7. THE CONTRACTOR SHALL INSPECT ALL SEDIMENT AND EROSION CONTROLS BEFORE AND AFTER EACH STORM (0.25 INCHES OR GREATER RAINFALL), OR AT LEAST WEEKLY, TO VERIFY THAT THE CONTROLS ARE OPERATING PROPERLY AND MAKE REPAIRS WHERE NECESSARY.
8. THE CONTRACTOR SHALL KEEP A SUPPLY OF SEDIMENT AND EROSION CONTROL MATERIAL (HAY BALES, SILT FENCE, JUTE MESH, RIP RAP, ETC.) ON-SITE FOR MAINTENANCE AND EMERGENCY REPAIRS.
9. PROTECT EXISTING TREES THAT ARE TO BE SAVED BY FENCING AT THE DRIP LINE OR AS SHOWN WITH SNOW FENCE, ORANGE SAFETY FENCE, OR EQUIVALENT FENCING. ANY LIMB TRIMMING SHOULD BE DONE BEFORE CONSTRUCTION BEGINS IN THAT AREA; FENCING SHALL BE MAINTAINED AND REPAIRED DURING CONSTRUCTION.
10. INSTALL PERIMETER SEDIMENT AND EROSION CONTROLS PRIOR TO CLEARING OR CONSTRUCTION. ALL CONSTRUCTION SHALL BE CONTAINED WITHIN THE LIMIT OF DISTURBANCE, WHICH SHALL BE MARKED WITH SILT FENCE, SAFETY FENCE, HAY BALES, RIBBONS, OR OTHER MEANS PRIOR TO CLEARING. CONSTRUCTION ACTIVITY SHALL REMAIN ON THE UPHILL SIDE OF THE SILT FENCE UNLESS WORK IS SPECIFICALLY CALLED FOR ON THE DOWNHILL SIDE OF THE FENCE.
11. STONE CONSTRUCTION ENTRANCE ANTI-TRACKING PADS SHALL BE INSTALLED AT START OF CONSTRUCTION AND MAINTAINED THROUGHOUT THE DURATION OF CONSTRUCTION. THE LOCATION OF THE TRACKING PADS MAY CHANGE AS VARIOUS PHASES OF CONSTRUCTION ARE COMPLETED.
12. TOPSOIL SHALL BE STRIPPED AND STOCKPILED FOR USE IN FINAL LANDSCAPING. ALL EARTH STOCKPILES SHALL HAVE HAY BALES OR SILT FENCE AROUND THE LIMIT OF PILE. PILES SHALL BE TEMPORARILY SEEDED IF PILE IS TO REMAIN IN PLACE FOR MORE THAN ONE (1) MONTH.
13. SEDIMENT BASINS AND SEDIMENT TRAPS SHALL PROVIDE 134 CUBIC YARDS OF SEDIMENT STORAGE PER ACRE CONTRIBUTING TO THE BASIN. PROVIDE BASIN VOLUMES FOR ALL DISTURBANCE ON SITE.
14. COMPLY WITH REQUIREMENTS OF CGS SECTION 22A 430B, FOR STORMWATER DISCHARGE FROM CONSTRUCTION ACTIVITIES AND WITH CTDEEP RECORD KEEPING AND INSPECTION REQUIREMENTS.
15. STONE CONSTRUCTION ENTRANCE ANTI-TRACKING PADS SHALL BE INSTALLED PRIOR TO ANY ON SITE EXCAVATION AND SHALL BE MAINTAINED DURING ALL DEMOLITION, EXCAVATION AND CONSTRUCTION ACTIVITIES.
16. MINIMIZE LAND DISTURBANCES. SEED AND MULCH DISTURBED AREAS WITH TEMPORARY MIX AS SOON AS PRACTICABLE (ONE WEEK MAXIMUM UNSTABILIZED PERIOD) USING PERENNIAL RYEGRASS AT 40 LBS PER ACRE, MULCH ALL CUT AND FILL SLOPES AND SWALES WITH LOOSE HAY AT A RATE OF 2 TONS PER ACRE. IF NECESSARY, REPLACE LOOSE HAY ON SLOPES WITH EROSION CONTROL BLANKETS OR JUTE CLOTH. MODERATELY GRADED AREAS, ISLANDS, AND TEMPORARY CONSTRUCTION STAGING AREAS MAY BE HYDROSEEDED WITH TACKIFIER.
17. MAINTAIN EXISTING PAVED AREAS FOR CONSTRUCTION STAGING FOR AS LONG AS POSSIBLE.
18. SILT FENCE AND OTHER SEDIMENT AND EROSION CONTROL MEASURES SHALL BE INSTALLED IN ACCORDANCE WITH CONTRACT DRAWINGS AND MANUFACTURER'S RECOMMENDATIONS PRIOR TO WORK IN ANY UPLAND AREAS.
19. EXCAVATED MATERIAL FROM TEMPORARY SILT TRAPS MUST BE STOCKPILED ON UPHILL SIDE OF SILT FENCE.
20. INSTALL SILT FENCE ACCORDING TO MANUFACTURER'S INSTRUCTION, PARTICULARLY, BURY LOWER EDGE OF FABRIC INTO GROUND. SILT FENCE SHALL BE TENCATE ENVIROFENCE, PROPEX GEOTEX OR EQUIVALENT APPROVED BY THE CIVIL ENGINEER. FILTER FABRIC USED SHALL BE TENCATE 140N OR 170N, OR APPROVED EQUIVALENT. SEE SPECIFICATIONS FOR FURTHER INFORMATION.
21. WHERE INDICATED ON SEDIMENT AND EROSION CONTROL PLANS USE NEW HAY/STRAW BALES AND REPLACE THEM WHENEVER THEIR CONDITION DETERIORATES BEYOND REASONABLE USABILITY. STAKE BALES SECURELY INTO GROUND AND BUTT TIGHTLY TOGETHER TO PREVENT UNDERCUTTING AND BYPASSING.
22. INSTALL TEMPORARY DIVERSION DITCHES, PLUNGE POOLS, SEDIMENT BASINS, SEDIMENT TRAPS, CONCRETE WASH PITS AND DEWATERING PITS AS SHOWN AND AS NECESSARY DURING VARIOUS PHASES OF CONSTRUCTION TO CONTROL RUNOFF UNTIL UPHILL AREAS ARE DETERMINED TO BE STABILIZED BY THE AUTHORITY HAVING JURISDICTION. LOCATION OF TEMPORARY SEDIMENT BASINS WILL REQUIRE REVIEW AND APPROVAL BY THE CIVIL ENGINEER AND AUTHORITY HAVING JURISDICTION.
23. DIRECT ALL DEWATERING PUMP DISCHARGE TO A SEDIMENT CONTROL DEVICE SUCH AS TEMPORARY PITS, SEDIMENT TRAP, SEDIMENT BASINS OR GRASS FILTERS WITHIN THE APPROVED LIMIT OF DISTURBANCE. DISCHARGE TO STORM DRAINAGE SYSTEM OR SURFACE WATERS FROM SEDIMENT CONTROLS SHALL BE CLEAR.
24. SWEEP AFFECTED PORTIONS OF OFF SITE ROADS ONE OR MORE TIMES A DAY (OR LESS FREQUENTLY IF TRACKING IS NOT A PROBLEM) DURING CONSTRUCTION. OTHER DUST CONTROL MEASURES TO BE USED AS NECESSARY INCLUDE WATERING DOWN DISTURBED AREAS, USING CALCIUM CHLORIDE, AND COVERING LOADS ON DUMP TRUCKS.
25. PERIODICALLY CHECK ACCUMULATED SEDIMENT LEVELS IN THE SEDIMENT BASINS AND SEDIMENT TRAPS DURING CONSTRUCTION AND CLEAN ACCUMULATED SILT WHEN NECESSARY OR WHEN ONE FOOT OF SEDIMENT HAS ACCUMULATED OR PER SPECIFIC CLEANOUT MARKER ELEVATION. CLEAN ACCUMULATED SEDIMENT FROM CATCH BASIN SUMPS AS NECESSARY AND AS DIRECTED BY THE CIVIL ENGINEER OR OWNER'S CONSTRUCTION REPRESENTATIVE. REMOVE ACCUMULATED SEDIMENT FROM BEHIND HAY/STRAW BALES AND SILT FENCE WHEN LEVEL REACHES HALF THE HEIGHT OF THE BALE OR ONE FOOT AT SILT FENCE. DISPOSE OF SEDIMENT LEGALLY EITHER ON OR OFF SITE.
26. IMMEDIATELY UPON DISCOVERING UNFORESEEN CIRCUMSTANCES POSING THE POTENTIAL FOR ACCELERATED EROSION AND/OR SEDIMENT POLLUTION, THE OPERATOR SHALL IMPLEMENT APPROPRIATE BEST MANAGEMENT PRACTICES TO ELIMINATE THE POTENTIAL FOR ACCELERATED EROSION AND/OR SEDIMENT POLLUTION.
27. ALL PUMPING OF SEDIMENT LADEN WATER SHALL BE THROUGH A SEDIMENT CONTROL BMP, SUCH AS A PUMPED WATER FILTER BAG OR EQUIVALENT SEDIMENT REMOVAL FACILITY, OVER UNDISTURBED VEGETATED AREAS.
28. ALL EXCAVATED MATERIAL SHALL BE PLACED ON THE HIGH SIDE OF UTILITY AND STORM PIPE TRENCHES SO AS TO ALLOW THE TRENCH TO INTERCEPT ALL SILT LADEN RUNOFF.
29. CONTRACTOR SHALL ONLY EXCAVATE AS MUCH UTILITY AND STORM PIPE TRENCH WORK AS CAN BE COMPLETED, BACKFILLED AND STABILIZED IN ONE DAY SO AS TO LIMIT THE AMOUNT OF OPEN, DISTURBED TRENCHING.
30. ANY STOCKPILES OF STRIPPED MATERIALS ARE TO BE PERIODICALLY SPRAYED WITH WATER OR A CRUSTING AGENT TO STABILIZE POTENTIALLY WIND-BLOWN MATERIAL. HAUL ROADS BOTH INTO AND AROUND THE SITE ARE TO BE SPRAYED AS NEEDED TO SUPPRESS DUST. TRUCKS HAULING IMPORT FILL MATERIAL ARE TO BE TARPED TO AID IN THE CONTROL OF AIRBORNE DUST. DURING HIGH WIND EVENTS (20 TO 30 MPH SUSTAINED) CONSTRUCTION ACTIVITY SHALL BE LIMITED OR CEASED IF DUST CANNOT BE CONTROLLED BY WETTING.
31. AN AREA SHALL BE CONSIDERED TO HAVE ACHIEVED FINAL STABILIZATION WHEN IT HAS A MINIMUM OF 70% UNIFORM PERENNIAL VEGETATIVE COVER OR OTHER PERMANENT NON-VEGETATIVE COVER WITH A DENSITY SUFFICIENT TO RESIST ACCELERATED SURFACE EROSION AND SUBSURFACE CHARACTERISTICS SUFFICIENT TO RESIST SLIDING OR OTHER MOVEMENTS UNLESS OTHERWISE DETERMINED BY THE AUTHORITY HAVING JURISDICTION.
32. MAINTAIN ALL PERMANENT AND TEMPORARY EROSION AND SEDIMENT CONTROL DEVICES IN EFFECTIVE CONDITION THROUGHOUT THE CONSTRUCTION PERIOD. UPON COMPLETION OF WORK SWEEP PARKING LOT AND REMOVE ALL TEMPORARY EROSION AND SEDIMENT CONTROLS WHEN AUTHORIZED BY AUTHORITY HAVING JURISDICTION. FILE NOT (NOTICE OF TERMINATION) WITH AUTHORITY HAVING JURISDICTION RESPONSIBLE FOR REGULATING STORM WATER DISCHARGES FROM CONSTRUCTION ACTIVITIES PER NPDES.

FOR PERMITTING PURPOSES ONLY
NOT RELEASED FOR CONSTRUCTION

Architecture
Engineering
Environmental
Land Surveying
BL Companies
100 Constitution Plaza
10th Floor
Hartford, CT 06103
(860) 249-2200

STATE OF CONNECTICUT
TIMOTHY A. HOWE
25117
LICENSED PROFESSIONAL ENGINEER

PROPOSED MANUFACTURING / INDUSTRIAL DEVELOPMENT
50-58 RAINBOW ROAD
EAST GRANBY, CONNECTICUT 06026

No.	Date	Desc.
REVISIONS		

| | |
|

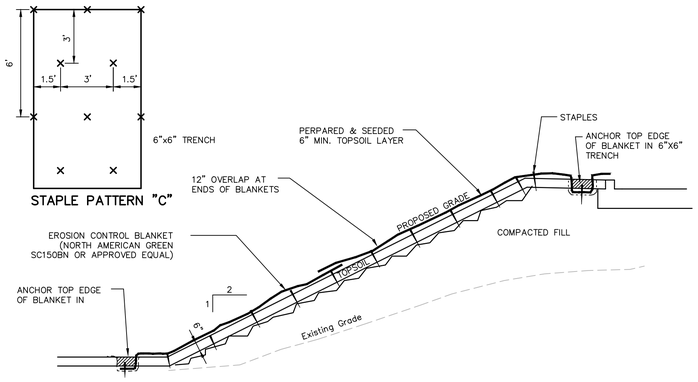

EROSION CONTROL BLANKET

N.T.S. BLEC–009

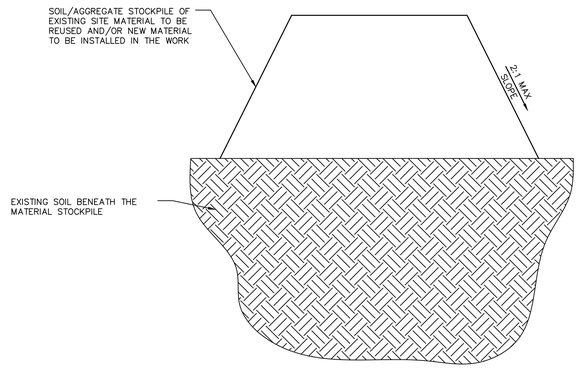

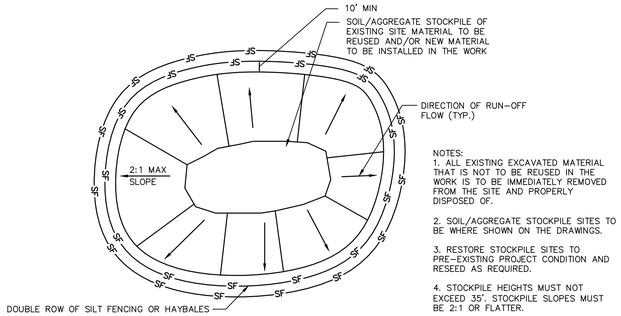

NOTES:
1. ALL EXISTING EXCAVATED MATERIAL THAT IS NOT TO BE REUSED IN THE WORK IS TO BE IMMEDIATELY REMOVED FROM THE SITE AND PROPERLY DISPOSED OF.

2. SOIL/AGGREGATE STOCKPILE SITES TO BE WHERE SHOWN ON THE DRAWINGS.

3. RESTORE STOCKPILE SITES TO PRE–EXISTING PROJECT CONDITION AND RESEED AS REQUIRED.

4. STOCKPILE HEIGHTS MUST NOT EXCEED 35', STOCKPILE SLOPES MUST BE 2:1 OR FLATTER.

MATERIALS STOCKPILE DETAIL

N.T.S. BLEC–006

* WHERE SEDIMENTS CONTAIN LESS THAN 80% SAND, A 100 FT MINIMUM IS REQUIRED.

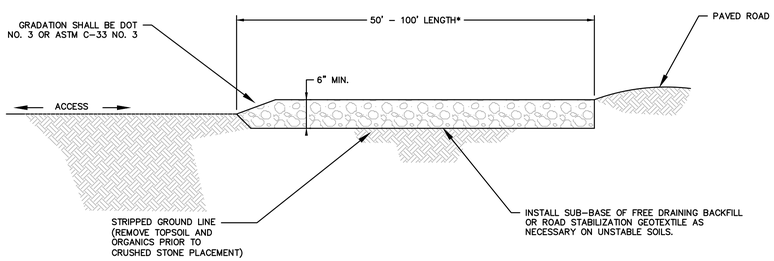

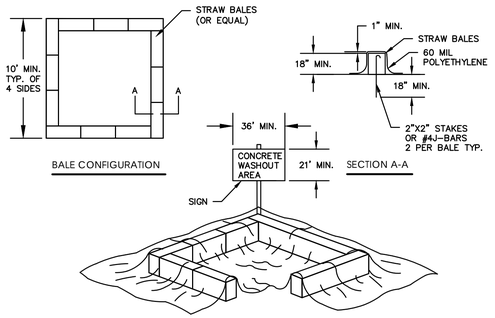

CONCRETE WASH PIT

N.T.S.

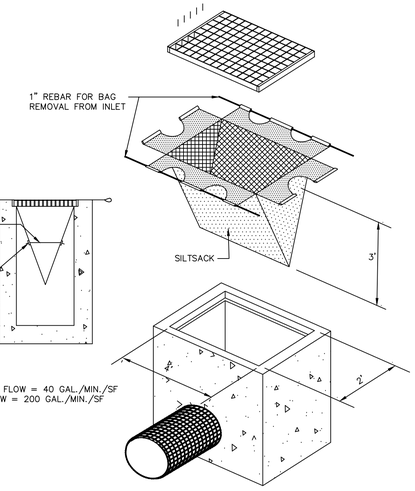

SILTSACK DETAIL

N.T.S. BLEC–005

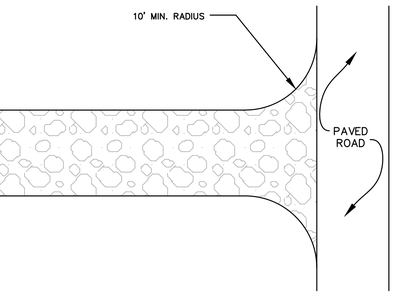

TYPICAL CONSTRUCTION ENTRANCE

N.T.S. CT DEEP CE–2

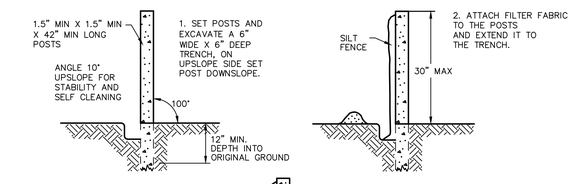

SILT FENCE BARRIER

N.T.S. CTEC–003

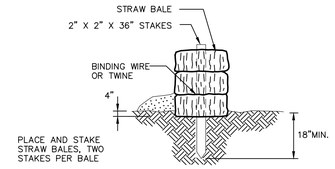

STRAW BALE BARRIERS SHOULD NOT BE USED FOR MORE THAN 3 MONTHS

SEDIMENT MUST BE REMOVED WHEN ACCUMULATIONS REACH 1/3 THE ABOVE GROUND HEIGHT OF THE BARRIER.

ANY SECTION OF STRAW BALE BARRIER WHICH HAS BEEN UNDERMINED OR TOPPED MUST BE IMMEDIATELY REPLACED WITH A ROCK FILTER OUTLET.

HAY BALE DETAIL

N.T.S. BLEC–007

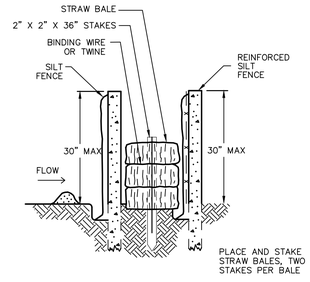

STRAW BALE BARRIERS SHOULD NOT BE USED FOR MORE THAN 3 MONTHS

SEDIMENT MUST BE REMOVED WHEN ACCUMULATIONS REACH 1/3 THE ABOVE GROUND HEIGHT OF THE BARRIER.

ANY SECTION OF STRAW BALE BARRIER WHICH HAS BEEN UNDERMINED OR TOPPED MUST BE IMMEDIATELY REPLACED WITH A ROCK FILTER OUTLET.

THE SILT FENCE, REINFORCED SILT FENCE AND STRAY BALES SHALL BE INSTALLED WITH NO SPACE BETWEEN THE BALES AND THE TWO SILT FENCE LAYERS.

DOUBLE SILT FENCE WITH HAY BALES

N.T.S.

FOR PERMITTING PURPOSES ONLY
NOT RELEASED FOR CONSTRUCTION

Architecture
Engineering
Environmental
Land Surveying

BL Companies

100 Constitution Plaza
10th Floor
Hartford, CT 06103
(860) 249-2200

STATE OF CONNECTICUT
TIMOTHY A. HOLE
38117
LICENSED
PROFESSIONAL ENGINEER

PROPOSED MANUFACTURING / INDUSTRIAL DEVELOPMENT
50-58 RAINBOW ROAD
EAST GRANBY, CONNECTICUT 06026

REVISIONS

No.	Date	Desc.

Designed	M.A.G.
Drawn	M.A.G.
Reviewed	T.A.H.
Scale	NONE
Project No.	2300888
Date	06/03/2025

CAD File:
EC230088801

Title

SEDIMENT AND EROSION CONTROL DETAILS

Sheet No.

EC-10

Xref ID: - B023008B801 - XC230088801 - XC230088802 - XC230088803 - XY200037D1 - 2024-2852-HWY - 0518-101 Preliminary

EXPORT: PMARTINEZ, ID: 1.0E5E21.00.2300888.DWG | EC230088801.DWG | EC-10 24x36
© 2025 BL COMPANIES, INC. THESE DRAWINGS SHALL NOT BE UTILIZED BY ANY PERSON, FIRM OR CORPORATION WITHOUT THE SPECIFIC WRITTEN PERMISSION OF BL COMPANIES.

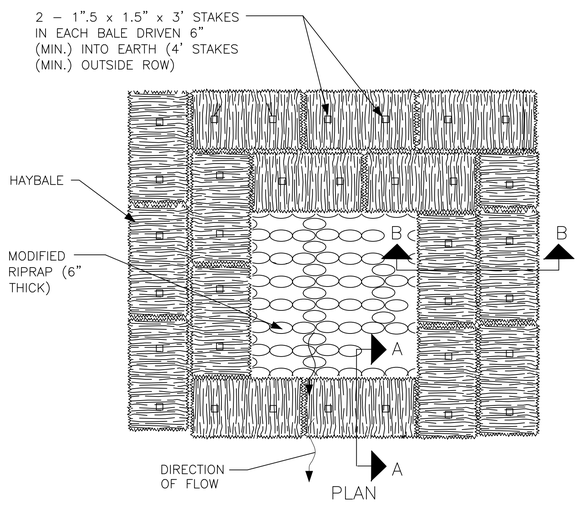

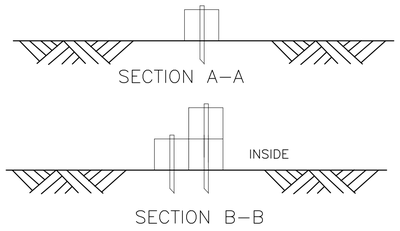

NOTES:
1.) THE DESIGN OF DEWATERING METHODS AND DEVICES SHALL BE THE CONTRACTORS RESPONSIBILITY. THE CONTRACTOR SHALL PROVIDE A WRITTEN PROPOSAL FOR SPECIFIC METHODS AND DEVICES, INCLUDING DETAILS FOR PUMPS, DISCHARGE RECEPTACLE AND OTHER ASSOCIATED WORK AS REQUIRED BY BEST MANAGEMENT PRACTICES.

2.) THE TYPE, SIZE AND NUMBER OF RECEPTACLES SHALL BE MODIFIED AS REQUIRED BY THE FLOW RATES.

TEMPORARY DEWATERING DISCHARGE RECEPTACLE

N.T.S.

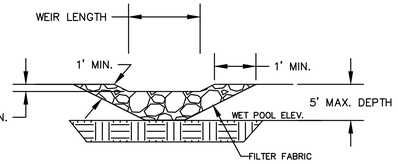

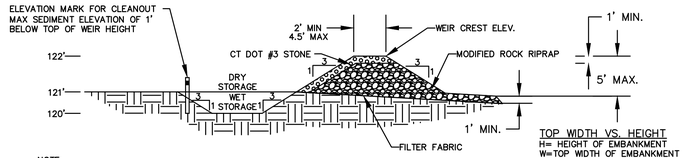

NOTE:
1. ALL DETAIL INFORMATION SHOULD BE USED AS A GUIDELINE. ALL TEMPORARY SEDIMENT TRAPS MUST CONFORM TO THE CT DEEP 2002 GUIDELINES FOR SOIL EROSION AND SEDIMENT CONTROL MANUAL.

2. THE VOLUME OF THE WET STORAGE SHALL BE AT LEAST TWICE THE VOLUME OF THE SEDIMENT STORAGE VOLUME AND SHALL BE DESIGNED TO A MINIMUM DEPTH OF 2 FEET, PER CT DEEP 2002 CONNECTICUT GUIDELINES FOR SOIL EROSION AND SEDIMENT CONTROL MANUAL.

TOP WIDTH VS. HEIGHT
H= HEIGHT OF EMBANKMENT
W=TOP WIDTH OF EMBANKMENT

H(ft)	W (ft)
1.5	2.0
2.0	2.0
2.5	2.5
3.0	2.5
3.5	3.0
4.0	3.0
4.5	4.0
5.0	4.5

TEMPORARY SEDIMENT TRAP

N.T.S. BLEC–002

3" *Faircloth Skimmer®* Cut Sheet

J. W. Faircloth & Son, Inc.
www.FairclothSkimmer.com

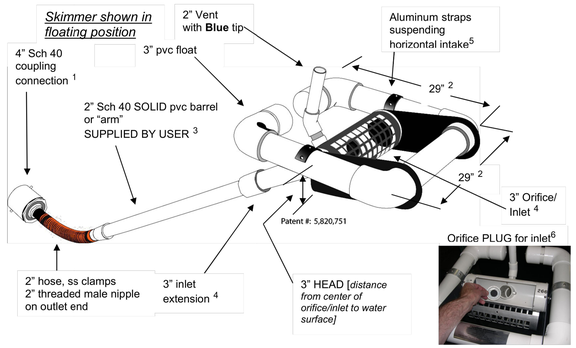

1. Coupling can be removed and hose attached to outlet using the threaded 2" nipple. Typical methods: a) a metal structure with a steel stub out welded on the side at the bottom with a 2" threaded coupling or reducer(s); b) a concrete structure with a hole or orifice at the bottom - use a steel plate with a hole cut in it and coupling welded to it that will fit over the hole in the concrete and bolted to the structure with sealant; or c) grout a 4" pvc pipe in a hole in the concrete to connect the skimmer. It can be attached to a straight 4" sch 40 pipe through the dam but the pipe needs to be anchored to the bottom at the connection so it is secure.

2. Dimensions are approximate, not intended as plans for construction.

3. Barrel (solid, not foam core pipe) should be 1.4 times the depth of water with a minimum length of 8' so the inlet can be pulled to the side for maintenance. If more than 10' long weight may have to be added to inlet to counter the increased buoyancy.

4. Orifice/inlet tapers down from a 3" maximum inlet to a 2" barrel and hose. Barrel is smaller to reduce buoyancy and tendency to lift inlet but is sufficient for flow through inlet because of slope. The orifice/inlet can be reduced using the plug and cutter provided to control the outflow rate – see #6.

5. Horizontal intake is 6" pipe between the straps with aluminum screen door for access to the 3" inlet and orifice inside.

6. **Capacity:** 9,774 cubic feet per day maximum with 3" inlet and 3" head. Inlet can be reduced by installing a smaller orifice using the plug and cutter provided to adjust flow rate for the particular drawdown time required. Please use the sizing template at www.fairclothskimmer.com .

7. Ships assembled. User glues inlet extension and barrel, installs vent, cuts orifice in plug and attaches to outlet pipe or structure. Includes float, flexible hose, rope, orifice plug & cutter. Does NOT include 2" Sch 40 SOLID pvc barrel or "arm" SUPPLIED BY USER.

3inchCut 5-1-2019

© J. W. Faircloth & Son, Inc. 2019

SEDIMENT TRAP SKIMMER

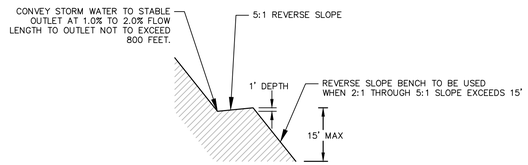

REVERSE SLOPE BENCH

N.T.S.

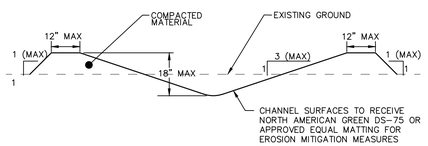

NON-ENGINEERED TEMPORARY DIVERSION DITCH DETAIL

N.T.S.

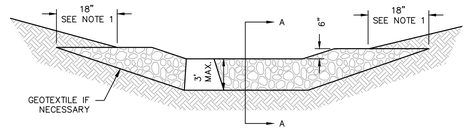

VIEW LOOKING UPSTREAM
(NOT TO SCALE)

NOTES:
1) KEY STONE INTO THE SWALE BANKS AND EXTEND INTO THE ABUTMENTS A MINIMUM OF 18" TO PREVENT FLOW FROM FLANKING THE CHECK DAM.

2) THE MINIMUM DESIGN CAPACITY SHALL CONVEY A 2 YEAR – 24 HOUR PEAK FLOW.

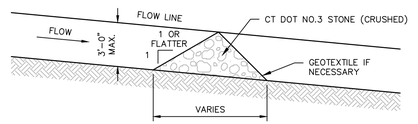

SECTION A–A
(NOT TO SCALE)

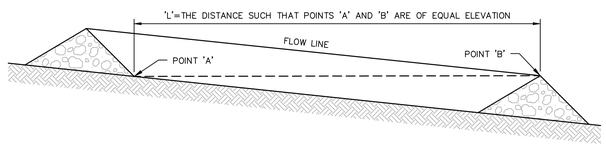

SPACING BETWEEN CHECK DAMS
(NOT TO SCALE)

STONE CHECK DAM INSTALLATION IN DRAINAGE WAYS

N.T.S. FIGURE SCD–2

FOR PERMITTING PURPOSES ONLY
NOT RELEASED FOR CONSTRUCTION

Architecture
Engineering
Environmental
Land Surveying

BL Companies

100 Constitution Plaza
10th Floor
Hartford, CT 06103
(860) 249-2200

STATE OF CONNECTICUT
TIMOTHY A. HOLE
3811
LICENSED PROFESSIONAL ENGINEER

PROPOSED MANUFACTURING / INDUSTRIAL DEVELOPMENT
50-58 RAINBOW ROAD
EAST GRANBY, CONNECTICUT 06026

No.	Date	REVISIONS Desc.

Designed	M.A.G.
Drawn	M.A.G.
Reviewed	
Scale	NONE
Project No.	2300888
Date	06/03/2025
CAD File: EC230088801	

Title

SEDIMENT AND EROSION CONTROL DETAILS

Sheet No.

EC-11

Xref (s) - BD230088801, XZ230088801, XC230088802, XC230088803, XY0000D701, 2024-2832-HWY, 0518-101 Preliminary

© 2025 BL COMPANIES, INC. THESE DRAWINGS SHALL NOT BE UTILIZED BY ANY PERSON, FIRM OR CORPORATION WITHOUT THE SPECIFIC WRITTEN PERMISSION OF BL COMPANIES.

6/3/2025, PMARTINEZ, G:\JOBS\2100\2300888\DWG\EC230088801.DWG EC-11 24X36

LANDSCAPE INFORMATION

LOCATION: EAST GRANBY, CONNECTICUT				
ZONE: CPT (COMMERCE PARK TRANSITION)				
USE: WAREHOUSE (PERMITTED) / MULTI-FAMILY RESIDENTIAL (SPECIAL PERMIT)				
ITEM #	**ITEM**	**CPT**	**PROPOSED**	**VARIANCE**
1	OVERALL LANDSCAPE AREA REQUIREMENT SEC VII.A.2.a.	AT LEAST 40% OF THE TOTAL LOT AREA ±5,676,838.2 S.F. x 40% = 2,270,736 S.F. (±52.12 AC.)	EXISTING VEGETATION TO REMAIN = ±2,505,588 S.F. PROPOSED NEW LANDSCAPING = ±959,631 S.F. TOTAL = ±3,465,219 S.F. (±79.55 AC. 61%)	NO
2	OVERALL LANDSCAPE AREA REQUIREMENT SEC VII.A.2.c.	ONE SHADE TREE AT LEAST 3 INCHES IN CALIPER FOR EACH 50 FEET OF PERIMETER	EXISTING VEGETATION TO REMAIN	NO
3	LANDSCAPED BUFFER REQUIREMENT SEC VII.A.3.	LANDSCAPE BUFFERS SHALL BE PROVIDED BETWEEN DISSIMILAR LAND USES ON INTENSITIES AS REQUIRED BY THE COMMISSION. SUCH LANDSCAPE BUFFERS SHALL CONTAIN ADEQUATE LANDSCAPE MATERIALS TO SATISFY, IN THE OPINION OF THE COMMISSION, THE PURPOSE OF THIS SECTION.	LANDSCAPE BUFFER PROPOSED BETWEEN DIFFERENT USES	NO
4	REFUSE STORAGE SEC VII.E.2.b.	REFUSE STORAGE AREAS SHALL BE ENCLOSED AND SCREENED FROM VIEW WITH FENCING, WALL OR HEDGE/SHRUBS.	EVERGREEN SHRUBS SCREEN PROPOSED AROUND DUMPSTER	NO

LANDSCAPE LEGEND

- PROPERTY LINE
- LOD — LIMIT OF DISTURBANCE/CONTRACT LIMIT LINE
- PROVIDE AND INSTALL LAWN SEED MIX (REFER TO SHEET LL-8 FOR SEED MIX DETAILS)
- PROVIDE AND INSTALL SLOPE SEED MIX (REFER TO SHEET LL-8 FOR SEED MIX DETAILS)
- PROVIDE AND INSTALL DETENTION BASIN SEED MIX (REFER TO SHEET LL-8 FOR SEED MIX DETAILS)
- PROVIDE AND INSTALL CONSERVATION SEED MIX (REFER TO SHEET LL-8 FOR SEED MIX DETAILS)
- PROVIDE AND INSTALL ROCK MULCH

PLANT SCHEDULE DEVELOPMENT LANDSCAPING

SYMBOL	CODE	QTY	BOTANICAL NAME	COMMON NAME	SIZE	CONTAINER
TREES						
	CB	29	CARPINUS BETULUS 'FASTIGIATA'	UPRIGHT EUROPEAN HORNBEAM	2"-2.5" CAL.	B&B
	GT	39	GLEDITSIA TRIACANTHOS INERMIS 'SHADEMASTER'	SHADEMASTER HONEY LOCUST	2"-2.5" CAL.	B&B
	PA	58	PLATANUS X ACERIFOLIA 'BLOODGOOD'	BLOODGOOD LONDON PLANE TREE	2-2.5" CAL.	B&B
EVERGREEN TREES						
	JV	24	JUNIPERUS VIRGINIANA	EASTERN REDCEDAR	7-8' HT.	B&B
	PP	22	PICEA PUNGENS	COLORADO SPRUCE	7-8' HT.	B&B
	PS2	27	PINUS STROBUS	WHITE PINE	7-8' HT.	B&B
	TO	50	THUJA OCCIDENTALIS 'SMARAGD'	EMERALD GREEN ARBORVITAE	6-7' HT.	B&B

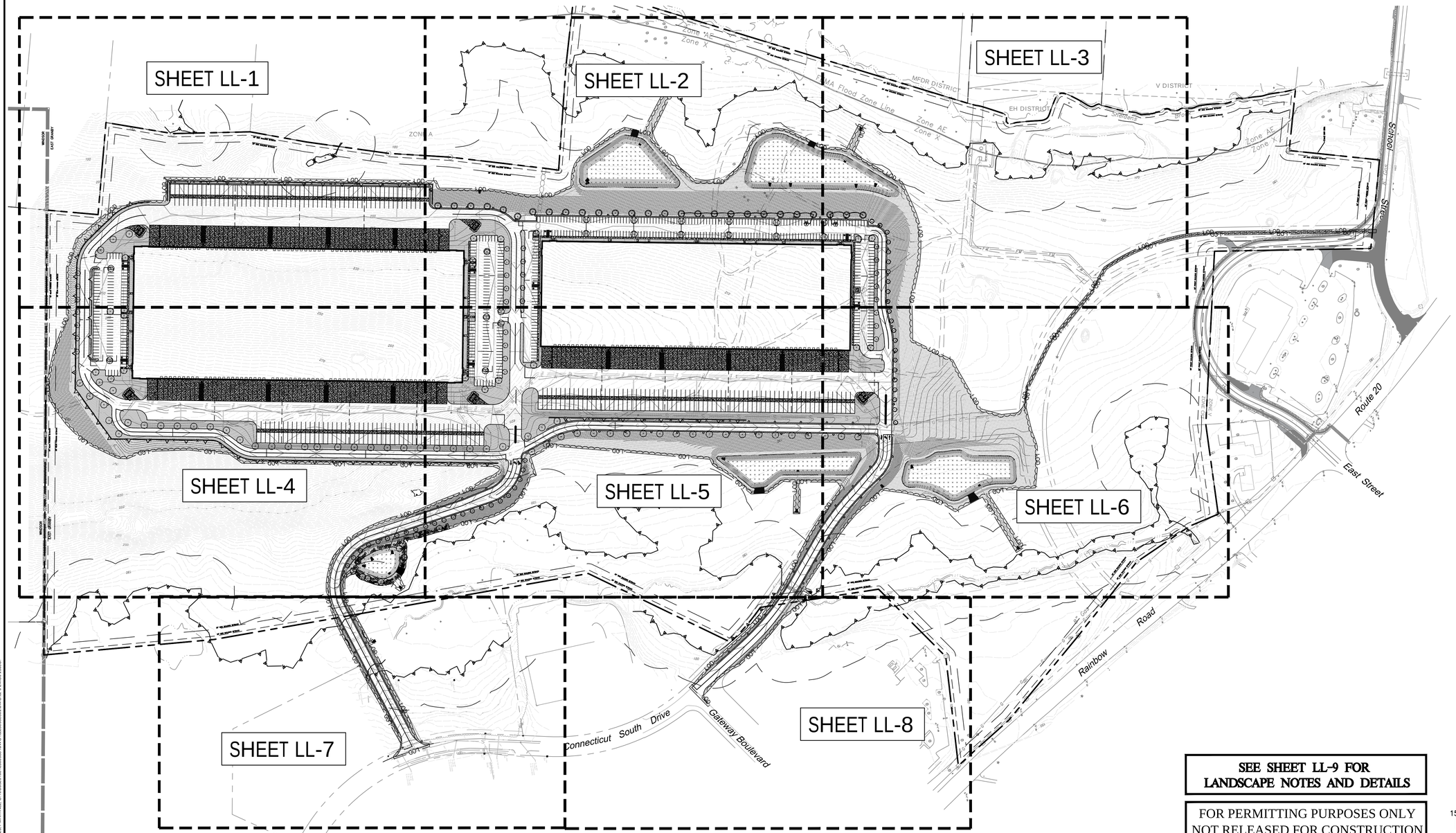

SEE SHEET LL-9 FOR LANDSCAPE NOTES AND DETAILS

FOR PERMITTING PURPOSES ONLY
NOT RELEASED FOR CONSTRUCTION

GRAPHIC SCALE
150 75 0 150
SCALE IN FEET

Architecture
Engineering
Environmental
Land Surveying

BL Companies

100 Constitution Plaza
10th Floor
Hartford, CT 06103
(860) 249-2200

STATE OF CONNECTICUT
TIMOTHY A. HOYT
25117
LICENSED PROFESSIONAL ENGINEER

PROPOSED MANUFACTURING / INDUSTRIAL DEVELOPMENT
50-58 RAINBOW ROAD
EAST GRANBY, CONNECTICUT 06026

REVISIONS
No. Date Desc.

Designed	J.C.W.
Drawn	N.Y.Y.
Reviewed	J.C.W.
Scale	1" = 150'-0"
Project No.	2300888
Date	06/03/2025
CAD File:	LL230088801

Title
OVERALL LANDSCAPE PLAN

Sheet No.
LL-0

Xref (s) - BD230088801, XZ230088801, XC2300888801, XC2300888804, XC2300888802, XC2300888803, XL2300888801, 2024-2823 HWY, 0518-101 Preliminary

© 2025 BL COMPANIES, INC. THESE DRAWINGS SHALL NOT BE UTILIZED BY ANY PERSON, FIRM OR CORPORATION WITHOUT THE SPECIFIC WRITTEN PERMISSION OF BL COMPANIES.

6/3/2025, PAKAPINEZ, G:\CIVIL\2023\01\2300888\DWG\LL230088801.DWG LL-0 24X36 1:150FC

LANDSCAPE LEGEND

- PROPERTY LINE
- LOD — LIMIT OF DISTURBANCE/CONTRACT LIMIT LINE
- PROVIDE AND INSTALL LAWN SEED MIX (REFER TO SHEET LL-8 FOR SEED MIX DETAILS)
- PROVIDE AND INSTALL SLOPE SEED MIX (REFER TO SHEET LL-8 FOR SEED MIX DETAILS)
- PROVIDE AND INSTALL DETENTION BASIN SEED MIX (REFER TO SHEET LL-8 FOR SEED MIX DETAILS)
- PROVIDE AND INSTALL CONSERVATION SEED MIX (REFER TO SHEET LL-8 FOR SEED MIX DETAILS)
- PROVIDE AND INSTALL ROCK MULCH

WINDSOR

EAST GRANBY

REFERENCE LINE – SEE SHEET LL-2

ZONE A

100' UPLAND REVIEW AREA

30' SIDE BUILDING SETBACK

10' REAR PARKING SETBACK

30' REAR PARKING SETBACK

PROPOSED INDUSTRIAL BLDG A
1000' X 400'
400,000 S.F.
116 LOADING SPACES
109 TRAILER SPACES

SEE SHEET LL-9 FOR LANDSCAPE NOTES AND DETAILS

FOR PERMITTING PURPOSES ONLY
NOT RELEASED FOR CONSTRUCTION

REFERENCE LINE – SEE SHEET LL-4

GRAPHIC SCALE
40 20 0 40
SCALE IN FEET

© 2025 BL COMPANIES, INC. THESE DRAWINGS SHALL NOT BE UTILIZED BY ANY PERSON, FIRM OR CORPORATION WITHOUT THE SPECIFIC WRITTEN PERMISSION OF BL COMPANIES.

Architecture
Engineering
Environmental
Land Surveying

BL Companies

100 Constitution Plaza
10th Floor
Hartford, CT 06103
(860) 249-2200

STATE OF CONNECTICUT
TIMOTHY A. HOLE
38117
LICENSED PROFESSIONAL ENGINEER

PROPOSED MANUFACTURING / INDUSTRIAL DEVELOPMENT

50-58 RAINBOW ROAD
EAST GRANBY, CONNECTICUT 06026

REVISIONS

No.	Date	Desc.

Designed	J.C.W.
Drawn	N.Y.Y.
Reviewed	J.C.W.
Scale	1" = 40'-0"
Project No.	2300888
Date	06/03/2025
CAD File: LL230088801	

Title

LANDSCAPE PLAN

Sheet No.

LL-1

Xref (s) - 80\23008880\1_XZ\230088801_XC2300888\1_XC2300888\4_XC2300888\2_XC2300888\3_XL2300888\1_2024-2832 HWY - 0518-101 Preliminary

8/3/2025, P:\MASTING - EL LOS\23\108\2300888\1 DWG\LL\230088801.DWG LL-1 24x36 ARCH

LANDSCAPE LEGEND

- PROPERTY LINE
- LOD — LIMIT OF DISTURBANCE/CONTRACT LIMIT LINE
- PROVIDE AND INSTALL LAWN SEED MIX (REFER TO SHEET LL-8 FOR SEED MIX DETAILS)
- PROVIDE AND INSTALL SLOPE SEED MIX (REFER TO SHEET LL-8 FOR SEED MIX DETAILS)
- PROVIDE AND INSTALL DETENTION BASIN SEED MIX (REFER TO SHEET LL-8 FOR SEED MIX DETAILS)
- PROVIDE AND INSTALL CONSERVATION SEED MIX (REFER TO SHEET LL-8 FOR SEED MIX DETAILS)
- PROVIDE AND INSTALL ROCK MULCH

Zone AE
Zone X
FEMA
30' SIDE BUILDING SETBACK
30' SIDE BUILDING SETBACK
100' UPLAND REVIEW AREA
REFERENCE LINE – SEE SHEET LL-1
REFERENCE LINE – SEE SHEET LL-3
REFERENCE LINE – SEE SHEET LL-5
SWMB #1
SWMB #2
LOD
GT 1
PS2 9
CB 5
TO 10

PROPOSED INDUSTRIAL BLDG B
937.5' X 320'
300,000 S.F.
60 LOADING SPACES
71 TRAILER SPACES

SEE SHEET LL-9 FOR LANDSCAPE NOTES AND DETAILS

FOR PERMITTING PURPOSES ONLY
NOT RELEASED FOR CONSTRUCTION

GRAPHIC SCALE
40 20 0 40
SCALE IN FEET

© 2025 BL COMPANIES, INC. THESE DRAWINGS SHALL NOT BE UTILIZED BY ANY PERSON, FIRM OR CORPORATION WITHOUT THE SPECIFIC WRITTEN PERMISSION OF BL COMPANIES.

Architecture
Engineering
Environmental
Land Surveying

BL Companies

100 Constitution Plaza
10th Floor
Hartford, CT 06103
(860) 249-2200

STATE OF CONNECTICUT
TIMOTHY A. HOLLY
3817
LICENSED PROFESSIONAL ENGINEER

PROPOSED MANUFACTURING / INDUSTRIAL DEVELOPMENT

50-58 RAINBOW ROAD
EAST GRANBY, CONNECTICUT 06026

REVISIONS

No.	Date	Desc.

Designed	J.C.W.
Drawn	N.Y.Y.
Reviewed	J.C.W.
Scale	1" = 40'-0"
Project No.	2300888
Date	06/03/2025
CAD File: LL230088801	

Title

LANDSCAPE PLAN

Sheet No.

LL-2

Xref (s) : B023008880 1 , XC2300888 01 , XC2300888 04 , XC2300888 02 , XC2300888 03 , XL2300888 01 , 2024-2832 HWY, 0518-101 Preliminary

6/3/2025, SHAWTANG, d:\ 2025\23 08 8\ 2300888 \DWG\ LL230088801.DWG LL-2 ADSK ARSC

LANDSCAPE LEGEND

- PROPERTY LINE
- LOD — LIMIT OF DISTURBANCE/CONTRACT LIMIT LINE
- PROVIDE AND INSTALL LAWN SEED MIX (REFER TO SHEET LL-8 FOR SEED MIX DETAILS)
- PROVIDE AND INSTALL SLOPE SEED MIX (REFER TO SHEET LL-8 FOR SEED MIX DETAILS)
- PROVIDE AND INSTALL DETENTION BASIN SEED MIX (REFER TO SHEET LL-8 FOR SEED MIX DETAILS)
- PROVIDE AND INSTALL CONSERVATION SEED MIX (REFER TO SHEET LL-8 FOR SEED MIX DETAILS)
- PROVIDE AND INSTALL ROCK MULCH

MFDR DISTRICT

EH DISTRICT

FEMA Flood Zone Line

Zone AE

Zone X

Sheldens Brook

30' SIDE BUILDING SETBACK

30' SIDE BUILDING SETBACK

30' SIDE BUILDING SETBACK

30' SIDE BUILDING SETBACK

REFERENCE LINE – SEE SHEET LL-2

REFERENCE LINE – SEE SHEET LL-6

SWMB #2

100' UPLAND REVIEW AREA

50' FRONT BUILDING SETBACK

25' FRONT PARKING SETBACK

PS2 3

GT 1

GT 1

GT 1

GT 1

CB 5

PP 10

170

180

190

SEE SHEET LL-9 FOR LANDSCAPE NOTES AND DETAILS

FOR PERMITTING PURPOSES ONLY
NOT RELEASED FOR CONSTRUCTION

GRAPHIC SCALE
40 20 0 40
SCALE IN FEET

© 2025 BL COMPANIES, INC. THESE DRAWINGS SHALL NOT BE UTILIZED BY ANY PERSON, FIRM OR CORPORATION WITHOUT THE SPECIFIC WRITTEN PERMISSION OF BL COMPANIES.

Architecture
Engineering
Environmental
Land Surveying

BL Companies

100 Constitution Plaza
10th Floor
Hartford, CT 06103
(860) 249-2200

STATE OF CONNECTICUT
TIMOTHY A. HOYT
38117
LICENSED
PROFESSIONAL ENGINEER

PROPOSED MANUFACTURING / INDUSTRIAL DEVELOPMENT

50-58 RAINBOW ROAD
EAST GRANBY, CONNECTICUT 06026

REVISIONS

No.	Date	Desc.

Designed	J.C.W.
Drawn	N.Y.Y.
Reviewed	J.C.W.
Scale	1" = 40'-0"
Project No.	2300888
Date	06/03/2025
CAD File: LL230088801	

Title

LANDSCAPE PLAN

Sheet No.

LL-3

Xref (s) : I:\2023\00888\01_XC\230088801_XC230088802_XC230088803_XC230088804_XC230088805_2024-2802_HWY_0518-101 Preliminary

I:\2023\00888\01\PAVEMENT_G-1\DRAWINGS\230088801 (MAP) LL230088801 (DWG) LL-3 24X36.ARRC

REFERENCE LINE – SEE SHEET LL–1

REFERENCE LINE – SEE SHEET LL–5

PROPOSED INDUSTRIAL BLDG A
1000' X 400'
400,000 S.F.
116 LOADING SPACES
109 TRAILER SPACES

10' REAR PARKING SETBACK

30' REAR PARKING SETBACK

REFERENCE LINE – SEE SHEET LL–7

100' UPLAND REVIEW AREA

WETLAND ENHANCEMENT PLANTING AREA, SEE SHEET LL–7 ENLARGEMENT FOR MORE DETAIL

SWMB #5

GRAPHIC SCALE
40 20 0 40
SCALE IN FEET

LANDSCAPE LEGEND

- PROPERTY LINE
- LOD — LIMIT OF DISTURBANCE/CONTRACT LIMIT LINE
- PROVIDE AND INSTALL LAWN SEED MIX (REFER TO SHEET LL–8 FOR SEED MIX DETAILS)
- PROVIDE AND INSTALL SLOPE SEED MIX (REFER TO SHEET LL–8 FOR SEED MIX DETAILS)
- PROVIDE AND INSTALL DETENTION BASIN SEED MIX (REFER TO SHEET LL–8 FOR SEED MIX DETAILS)
- PROVIDE AND INSTALL CONSERVATION SEED MIX (REFER TO SHEET LL–8 FOR SEED MIX DETAILS)
- PROVIDE AND INSTALL ROCK MULCH

SEE SHEET LL-9 FOR LANDSCAPE NOTES AND DETAILS

FOR PERMITTING PURPOSES ONLY
NOT RELEASED FOR CONSTRUCTION

© 2025 BL COMPANIES, INC. THESE DRAWINGS SHALL NOT BE UTILIZED BY ANY PERSON, FIRM OR CORPORATION WITHOUT THE SPECIFIC WRITTEN PERMISSION OF BL COMPANIES.

Architecture
Engineering
Environmental
Land Surveying

BL Companies

100 Constitution Plaza
10th Floor
Hartford, CT 06103
(860) 249-2200

STATE OF CONNECTICUT
TIMOTHY A. HOYLE
3817
LICENSED PROFESSIONAL ENGINEER

PROPOSED MANUFACTURING / INDUSTRIAL DEVELOPMENT
50-58 RAINBOW ROAD
EAST GRANBY, CONNECTICUT 06026

REVISIONS
No. Date Desc.

Designed	J.C.W.
Drawn	N.Y.Y.
Reviewed	J.C.W.
Scale	1" = 40'-0"
Project No.	2300888
Date	06/03/2025
CAD File:	LL230088801

Title
LANDSCAPE PLAN

Sheet No.
LL-4

Xref (s) : I:\2023\00888\01_X\C23008801 ; X2230088802 ; XC230088803 ; XL230088801 ; 2024-2802 HWY; 0518-101 Preliminary

I:\2023\00888\01\A\ARCH\01\R\23008801 (WHS) LL230088801.DWG LL-4 XAOA HRC

REFERENCE LINE – SEE SHEET LL–2

REFERENCE LINE – SEE SHEET LL–4

PROPOSED INDUSTRIAL BLDG B
937.5' X 320'
300,000 S.F.
60 LOADING SPACES
71 TRAILER SPACES

SWMB #3

REFERENCE LINE – SEE SHEET LL–6

100' UPLAND REVIEW AREA

REFERENCE LINE – SEE SHEET LL–7

REFERENCE LINE – SEE SHEET LL–8

30' SIDE BUILDING SETBACK

30' SIDE BUILDING SETBACK

30' SIDE BUILDING SETBACK

30' SIDE BUILDING SETBACK

LANDSCAPE LEGEND

- PROPERTY LINE
- LOD — LIMIT OF DISTURBANCE/CONTRACT LIMIT LINE
- PROVIDE AND INSTALL LAWN SEED MIX (REFER TO SHEET LL–8 FOR SEED MIX DETAILS)
- PROVIDE AND INSTALL SLOPE SEED MIX (REFER TO SHEET LL–8 FOR SEED MIX DETAILS)
- PROVIDE AND INSTALL DETENTION BASIN SEED MIX (REFER TO SHEET LL–8 FOR SEED MIX DETAILS)
- PROVIDE AND INSTALL CONSERVATION SEED MIX (REFER TO SHEET LL–8 FOR SEED MIX DETAILS)
- PROVIDE AND INSTALL ROCK MULCH

SEE SHEET LL-9 FOR LANDSCAPE NOTES AND DETAILS

FOR PERMITTING PURPOSES ONLY
NOT RELEASED FOR CONSTRUCTION

GRAPHIC SCALE
40 20 0 40
SCALE IN FEET

© 2025 BL COMPANIES, INC. THESE DRAWINGS SHALL NOT BE UTILIZED BY ANY PERSON, FIRM OR CORPORATION WITHOUT THE SPECIFIC WRITTEN PERMISSION OF BL COMPANIES.

Architecture
Engineering
Environmental
Land Surveying

BL Companies

100 Constitution Plaza
10th Floor
Hartford, CT 06103
(860) 249-2200

STATE OF CONNECTICUT
TIMOTHY A. HOYE
3817
LICENSED PROFESSIONAL ENGINEER

PROPOSED MANUFACTURING / INDUSTRIAL DEVELOPMENT

50-58 RAINBOW ROAD
EAST GRANBY, CONNECTICUT 06026

REVISIONS

No.	Date	Desc.

Designed	J.C.W.
Drawn	N.Y.Y.
Reviewed	J.C.W.
Scale	1" = 40'-0"
Project No.	2300888
Date	06/03/2025
CAD File: LL230088801	

Title

LANDSCAPE PLAN

Sheet No.

LL-5

Xref (s) : B023008880I1 , XZ230088801 , XC230088801 , XC230088804 , XC230088802 , XL230088801 , 2024-2832 HWY , 0518-101 Preliminary

LL-5 2025/6, SHARTNER, G:\ 1925\21\81\2300888\1DWG\LL230088801.DWG LL-5 ARCH (ARCH)

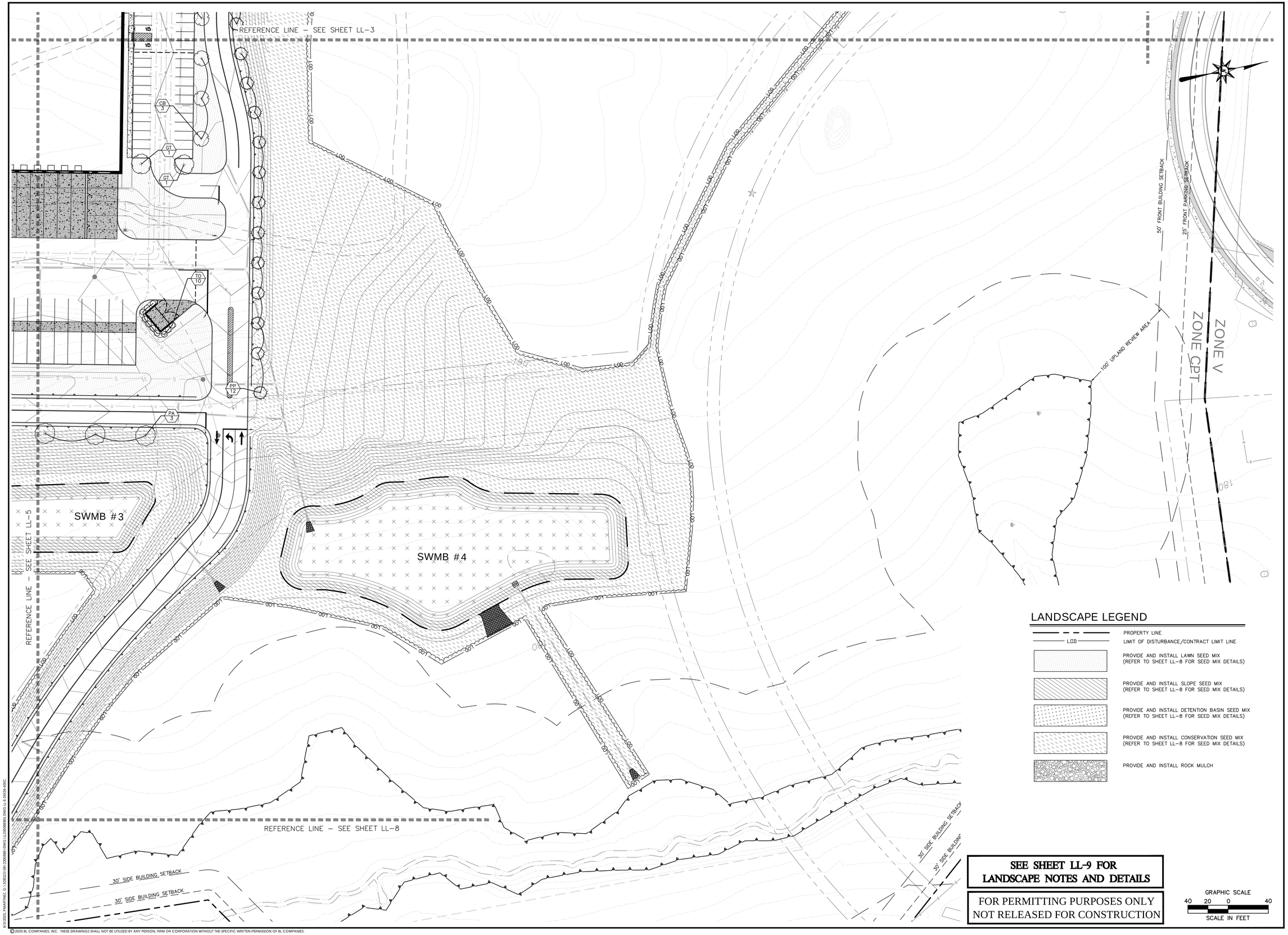

LANDSCAPE LEGEND

- PROPERTY LINE
- LOD — LIMIT OF DISTURBANCE/CONTRACT LIMIT LINE
- PROVIDE AND INSTALL LAWN SEED MIX (REFER TO SHEET LL-8 FOR SEED MIX DETAILS)
- PROVIDE AND INSTALL SLOPE SEED MIX (REFER TO SHEET LL-8 FOR SEED MIX DETAILS)
- PROVIDE AND INSTALL DETENTION BASIN SEED MIX (REFER TO SHEET LL-8 FOR SEED MIX DETAILS)
- PROVIDE AND INSTALL CONSERVATION SEED MIX (REFER TO SHEET LL-8 FOR SEED MIX DETAILS)
- PROVIDE AND INSTALL ROCK MULCH

SEE SHEET LL-9 FOR LANDSCAPE NOTES AND DETAILS

FOR PERMITTING PURPOSES ONLY
NOT RELEASED FOR CONSTRUCTION

GRAPHIC SCALE
40 20 0 40
SCALE IN FEET

BL Companies
Architecture
Engineering
Environmental
Land Surveying

100 Constitution Plaza
10th Floor
Hartford, CT 06103
(860) 249-2200

STATE OF CONNECTICUT
TIMOTHY A. HOULE
38117
LICENSED
PROFESSIONAL ENGINEER

PROPOSED MANUFACTURING / INDUSTRIAL DEVELOPMENT

50-58 RAINBOW ROAD
EAST GRANBY, CONNECTICUT 06026

REVISIONS

No.	Date	Desc.

Designed	J.C.W.
Drawn	N.Y.Y.
Reviewed	J.C.W.
Scale	1" = 40'-0"
Project No.	2300888
Date	06/03/2025
CAD File: LL230088801	

Title

LANDSCAPE PLAN

Sheet No.

LL-6

Xref (s): BD230088801 ; XC230088801 ; XC230088801 ; XC230088804 ; XC230088802 ; XC230088803 ; XL230088801 ; 2024-2832 HWY ; 0518-101 Preliminary

6/3/2025, PMARTINEZ, G:\JOBS23\08\2300888\DWG\LL230088801.DWG LL-6 24X36 40SC

© 2025 BL COMPANIES, INC. THESE DRAWINGS SHALL NOT BE UTILIZED BY ANY PERSON, FIRM OR CORPORATION WITHOUT THE SPECIFIC WRITTEN PERMISSION OF BL COMPANIES.

REFERENCE LINE – SEE SHEET LL-4

REFERENCE LINE – SEE SHEET LL-5

REFERENCE LINE – SEE SHEET LL-8

100' UPLAND REVIEW AREA

30' SIDE BUILDING SETBACK

30' SIDE BUILDING SETBACK

30' SIDE BUILDING SETBACK

SWMB #5

WETLAND ENHANCEMENT AREA
PLANTINGS, SEE SHEET LL-7
ENLARGEMENT FOR MORE DETAIL

100' UPLAND REVIEW AREA

15" RCP Flared End
Inv=184.02

Ex. Clapped I/P
(Other)

Ex. Clapped I/P
(Other)

Ex. Clapped I/P
186

Ex. Clapped I/P
(Other)

Ex. Clapped I/P
(Other)

Ex. Clapped I/P
(Other)

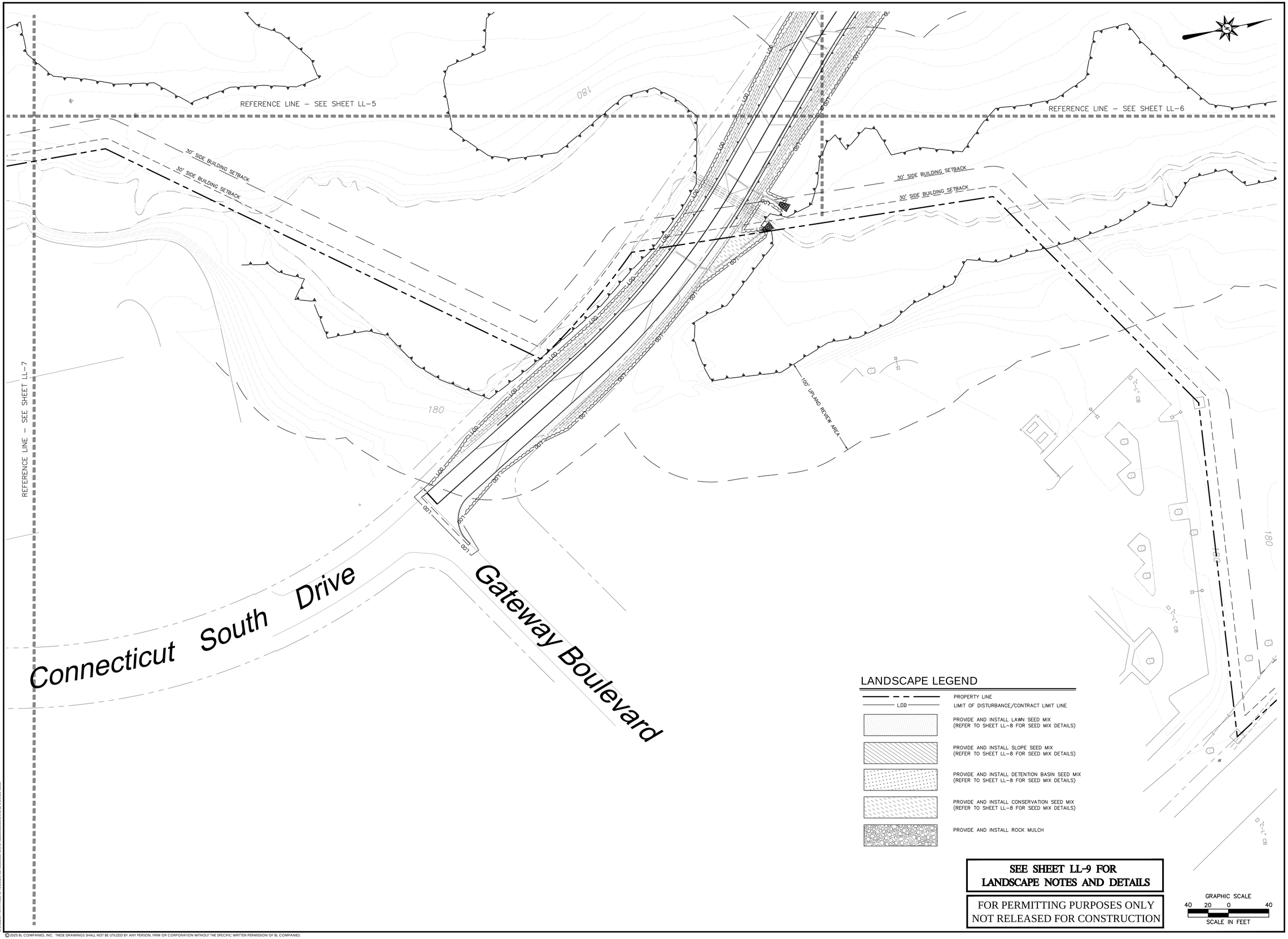

SEE SHEET LL-9 FOR LANDSCAPE NOTES AND DETAILS

FOR PERMITTING PURPOSES ONLY
NOT RELEASED FOR CONSTRUCTION

BL Companies
Architecture
Engineering
Environmental
Land Surveying

100 Constitution Plaza
10th Floor
Hartford, CT 06103
(860) 249-2200

STATE OF CONNECTICUT
TIMOTHY A. HOULE
38117
LICENSED
PROFESSIONAL ENGINEER

PROPOSED MANUFACTURING / INDUSTRIAL DEVELOPMENT

50-58 RAINBOW ROAD
EAST GRANBY, CONNECTICUT 06026

REVISIONS

No.	Date	Desc.

Designed	J.C.W.
Drawn	N.Y.Y.
Reviewed	J.C.W.
Scale	1" = 40'-0"
Project No.	2300888
Date	06/03/2025
CAD File:	LL230088801

Title

LANDSCAPE PLAN

Sheet No.

LL-8

Xref (s): ; BD230088801 ; XC230088801 ; XC230088802 ; XC230088803 ; XL230088801 ; 2024-2832 HWY ; 0518-101 Preliminary

6/3/2025, PMARTINEZ, G:\JOBS23\08\2300888\DWG\LL230088801.DWG LL-8 24X36-40SC.

© 2025 BL COMPANIES, INC. THESE DRAWINGS SHALL NOT BE UTILIZED BY ANY PERSON, FIRM OR CORPORATION WITHOUT THE SPECIFIC WRITTEN PERMISSION OF BL COMPANIES.

LANDSCAPE NOTES

1. THE LANDSCAPE PLAN AND DETAIL SHEET ARE FOR LANDSCAPING INFORMATION ONLY. REFER TO THE SITE PLAN, GRADING AND DRAINAGE PLAN, SITE UTILITIES PLAN, LIGHTING PLAN AND DEMOLITION PLAN FOR ALL OTHER INFORMATION.

2. COORDINATE PLANT MATERIAL LOCATIONS WITH SITE UTILITIES. UTILITY LOCATIONS SHOWN ON THE DRAWINGS ARE APPROXIMATE. EXERCISE CARE WHEN DIGGING IN AREAS OF POTENTIAL CONFLICT WITH UNDERGROUND OR OVERHEAD UTILITIES. THE CONTRACTOR IS RESPONSIBLE FOR ANY DAMAGE DUE TO CONTRACTOR'S NEGLIGENCE AND SHALL REPLACE OR REPAIR ANY DAMAGE AT CONTRACTOR'S EXPENSE.

3. THE LOCATIONS FOR PLANT MATERIAL ARE APPROXIMATE AND ARE SUBJECT TO FIELD ADJUSTMENT DUE TO UTILITY LOCATIONS AND SITE CONDITIONS. THE CONTRACTOR SHALL ACCURATELY STAKE OUT THE LOCATIONS FOR ALL PLANTS FOR THE REVIEW, ADJUSTMENT, AND APPROVAL BY OWNER OR LANDSCAPE ARCHITECT PRIOR TO PLANTING.

4. THE CONTRACTOR SHALL GUARANTEE THAT ALL PLANTS SHALL BE HEALTHY AND FREE OF DISEASE FOR A PERIOD OF ONE YEAR OR JUNE 1ST OF THE YEAR FOLLOWING INSTALLATION, WHICHEVER IS LONGER, AFTER SUBSTANTIAL COMPLETION AND ACCEPTANCE BY OWNER OR LANDSCAPE ARCHITECT. CONTRACTOR SHALL REPLACE ANY DEAD OR UNHEALTHY PLANTS AT CONTRACTOR'S EXPENSE. PLANT MATERIAL REPLACEMENTS SHALL BE GUARANTEED FOR ONE FULL YEAR FROM DATE OF REPLACEMENT. REPLACEMENT PLANTS SHALL BE THE SAME AS SPECIFIED FOR THE ORIGINAL PLANTING. REPLACEMENTS SHALL BE MADE AS MANY TIMES AS NECESSARY TO ENSURE HEALTHY PLANTS. FINAL ACCEPTANCE SHALL BE MADE IF ALL PLANTS MEET THE GUARANTEE REQUIREMENTS INCLUDING MAINTENANCE. MAINTENANCE RESPONSIBILITIES INCLUDE CULTIVATING, SPRAYING, WEEDING, WATERING, TIGHTENING GUYS, PRUNING, FERTILIZING, MULCHING, AND ANY OTHER OPERATIONS NECESSARY TO MAINTAIN PLANT VIABILITY. MAINTENANCE SHALL BEGIN IMMEDIATELY AFTER PLANTING AND CONTINUE UNTIL THE END OF THE GUARANTEE PERIOD. DURING THE LANDSCAPE MAINTENANCE PERIOD (GUARANTEE) THE LANDSCAPE CONTRACTOR SHALL NOTIFY THE OWNER IN WRITING OF ANY SITE CONSTRAINTS (PHYSICAL, ENVIRONMENT, ETC.) OR MAINTENANCE DEFICIENCIES THAT MAY AFFECT LANDSCAPE VEGETATION ESTABLISHMENT.

5. THE CONTRACTOR SHALL SUPPLY ALL LABOR, PLANTS, AND MATERIALS IN QUANTITIES SUFFICIENT TO COMPLETE THE WORK SHOWN ON THE DRAWINGS AND LISTED IN THE PLANT SCHEDULE. IN THE EVENT OF A DISCREPANCY BETWEEN QUANTITIES SHOWN IN THE PLANT SCHEDULE AND THOSE REQUIRED BY THE DRAWINGS, THE LARGER SHALL APPLY. ALL PLANTS SHALL BE ACCLIMATED BY THE SUPPLY NURSERY TO THE LOCAL HARDINESS ZONE AND BE CERTIFIED THAT THE PLANTING MATERIAL HAS BEEN GROWN FOR A MINIMUM OF TWO YEARS AT THE SOURCE AND OBTAINED WITHIN 200 MILES OF PROJECT SITE UNLESS OTHERWISE APPROVED BY OWNER OR LANDSCAPE ARCHITECT.

6. PLANTS SHALL HAVE TAGS THAT IDENTIFY PLANT GENUS, SPECIES, CULTIVAR (IF APPLICABLE), PLANT COMMON NAME, NAME OF SOURCE NURSERY, AND SIZE OF PLANT FOR REVIEW OF OWNER OR LANDSCAPE ARCHITECT.

7. NO PLANT SHALL BE PLACED IN THE GROUND BEFORE ROUGH GRADING HAS BEEN COMPLETED AND APPROVED BY THE OWNER OR LANDSCAPE ARCHITECT. STAKING THE LOCATION OF ALL TREES AND SHRUBS SHALL BE COMPLETED PRIOR TO PLANTING FOR APPROVAL BY THE OWNER OR LANDSCAPE ARCHITECT.

8. FINAL GRADES SHALL BLEND SMOOTHLY WITH EXISTING GRADES, AND TOP AND BOTTOM OF SLOPES SHALL BE ROUNDED.

9. ALL TREE AND SHRUB MASSINGS SHALL BE MULCHED TO A DEPTH OF 3". ANNUAL AND PERENNIAL BEDS SHALL BE MULCHED TO A DEPTH OF 2". MULCH SHALL BE UNCOLORED TRIPLE-SHREDDED HARDWOOD BARK MULCH, AGED AT LEAST 6 MONTHS.

10. IF TREE STAKING IS PROPOSED, TREE STAKING MUST BE COMPLETED THE SAME DAY AS THE TREE IS INSTALLED. ALL TREES SHALL BE STAKED OR GUYED PER DETAIL.

11. LANDSCAPE PLANTING AREAS MUST BE FREE DRAINING. PAVEMENT, COMPACTED SUBGRADE, DEAD OR DYING PLANT MATERIAL, BLASTED ROCK, STONES GREATER THAN 1" IN DIAMETER, AND ANY OTHER MATERIAL HARMFUL TO PLANT GROWTH AND DEVELOPMENT SHALL BE REMOVED FROM AREAS TO BE LANDSCAPED AS REQUIRED BY PLANTING DETAILS OR SPECIFICATIONS.

12. PLANTING SOIL:

DEPTH: PLANTING SOIL SHALL BE INSTALLED AT A MINIMUM DEPTH OF 4" OR AS NOTED IN THE LANDSCAPE DETAILS. PLANTING SOIL SHALL BE UTILIZED IN ALL PLANTING AREAS INCLUDING SEEDED AREAS.

TESTING: CONTRACTOR SHALL SUBMIT (2) SOIL SAMPLES PER SOIL STOCKPILE TO A CERTIFIED TESTING LABORATORY TO DETERMINE ACIDITY, ORGANIC CONTENT, MECHANICAL ANALYSIS, AVAILABLE NUTRIENTS (N,P,K,Ca,Mg,S,Fe,Mn,Zn,Cu,B,Al,Pb) AND NECESSARY AMENDMENTS TO SOIL. THE CONTRACTOR SHALL SUBMIT THE TEST RESULTS TO THE OWNER OR LANDSCAPE ARCHITECT FOR REVIEW AND APPROVAL. TEST RESULTS SHALL RECOMMEND AMENDMENTS THAT WILL ALTER THE SOIL CHARACTERISTICS SUCH THAT THE CHARACTERISTICS DESCRIBED BELOW ARE ACHIEVED AND THE SPECIFIED PLANTS (CONTRACTOR TO PROVIDE LIST TO TESTING LABORATORY) WILL ACHIEVE PROPER GROWTH THAT IS NEITHER DEFICIENT NOR EXCESSIVE. THE CONTRACTOR SHALL INCORPORATE THESE AMENDMENTS AT NO INCREASE IN CONTRACT PRICE.

CHARACTERISTICS: PLANTING SOIL MAY CONSIST OF EXISTING ON-SITE SOILS, AMENDED ON-SITE SOILS, OR IMPORTED SOILS MEETING THE FOLLOWING CRITERIA:

A. NOT TO CONTAIN MATERIALS HARMFUL TO PLANT LIFE, TO BE CLEAN, FERTILE, FRIABLE, AND WELL DRAINING. ALL PLANTING SOIL SHALL BE FREE OF ANY SUBSOIL EARTH CLODS, SODS, STONES OVER 1" IN ANY DIMENSION, STICKS, ROOTS, WEEDS, LITTER AND OTHER DELETERIOUS MATERIAL. PLANTING SOIL SHALL BE UNIFORM IN QUALITY AND TEXTURE.
B. PLANTING SOIL SHALL HAVE THE FOLLOWING OPTIMUM RANGES UNLESS OTHERWISE APPROVED BY THE OWNER OR LANDSCAPE ARCHITECT.

ORGANIC CONTENT	3% – 6% FOR LAWN OR GRASS AREAS. 4% – 8% FOR TREE AND SHRUB PLANTERS. 8%–16% FOR RETENTION OR DETENTION BASINS.
(BY LOSS OF IGNITION AT 375 C METHOD OF TESTING)	
PH	6.0 – 7.3

C. NUTRIENT LEVELS SHALL BE ACHIEVED BY THE CONTRACTOR'S ADDITION OF AMENDMENTS TO THE PLANTING SOIL TO MEET THE OPTIMUM NUTRIENT LEVELS SPECIFIED IN THE TESTING LABORATORY REPORT FOR EACH OF PLANTS TO BE INSTALLED.
D. SOIL SHALL BE COMPACTED TO A SURFACE PENETRATION RESISTANCE OF 75–125 LBS/SQ.IN.
E. SOIL MAY BE TREATED FOR WEEDS WITH PRE-EMERGENT OR POST-EMERGENT HERBICIDE, AS NEEDED AND AS APPROPRIATE FOR THE APPLICATION SEASON OR LOCATION, OR ELIMINATE GROWTH OF UNWANTED PLANT MATERIAL. APPLY HERBICIDES IN ACCORDANCE WITH MANUFACTURERS RECOMMENDATIONS. HERBICIDE APPLICATOR MUST BE LICENSED IN THE STATE OF CONNECTICUT, AND PERFORM APPLICATIONS IN ACCORDANCE WITH LOCAL REQUIREMENTS, PERMITTING STIPULATIONS, AND ANY OTHER RESTRICTIONS INCLUDING AND IN EXCESS OF STATE AND FEDERAL REGULATIONS.
F. PROPOSED TOPSOIL SHALL MEET THE USDA SOILS TEXTURAL PERCENTAGES OF SAND, SILT, AND CLAY FOR FOLLOWING CLASSIFICATIONS:
   - LOAM
   - SANDY LOAM WHERE SAND DOES NOT EXCEED 70% AND CLAY IS NOT LESS THAN 5%
   - SANDY CLAY LOAM WHERE SAND DOES NOT EXCEED 70% AND CLAY IS LESS THAN 28%
G. BIORETENTION SOILS: SOIL TO BE INSTALLED IN RETENTION BASINS, PONDS, OR OTHER STORMWATER MANAGEMENT ENVIRONS SHALL MEET THE ABOVE DESCRIBED CHARACTERISTICS AND AS FOLLOWS:
   - SOIL SHALL NOT CONTAIN MORE THAN 20% CLAY AND LESS THAN 40% SILT.
   - SOIL SHALL HAVE AN INFILTRATION RATE BETWEEN 1/2" AND 3" PER HOUR.
H. MODIFICATION TO THE PLANTING SOIL CHARACTERISTICS DESCRIBED ABOVE MAY BE SUBMITTED FOR APPROVAL BY THE LANDSCAPE ARCHITECT. CONTRACTOR MUST DEMONSTRATE PROPOSED CHARACTERISTICS ARE EQUAL TO OR SUPERIOR TO THE SPECIFIED CHARACTERISTICS WITH RESPECT TO SUPPORTING PLANT GROWTH, AND STORMWATER MANAGEMENT.

12. PLANTING AMENDMENTS:
APPLY FERTILIZER AND OTHER AMENDMENTS AS RECOMMENDED FOR EACH PLANTING AREA BY SOIL ANALYSIS. APPLY AMENDMENTS IN A MANNER CONSISTENT WITH MANUFACTURER'S RECOMMENDATIONS. ANY ORGANIC AMENDMENTS SHALL HAVE A pH BETWEEN 4.5 AND 5.5 UNLESS OTHERWISE RECOMMENDED.

13. PLANT REQUIREMENTS: ALL PLANTS SHALL CONFORM IN SIZE AND GRADE TO THE AMERICAN STANDARD FOR NURSERY STOCK, ANSI Z60.1 (LATEST EDITION). ALL PLANTS SHALL MEET THE ADDITIONAL REQUIREMENTS SET FORTH BELOW AND IN WRITTEN SPECIFICATIONS AS APPLICABLE. ALL TREES AND SHRUBS SHALL HAVE BEEN GROWN AT A COMMERCIAL NURSERY WITHIN 200 MILES OF THE PROJECT SITE UNLESS OTHERWISE APPROVED BY OWNER OR LANDSCAPE ARCHITECT. THEY SHALL BE TYPICAL OF THEIR SPECIES OR VARIETY. THEY SHALL BE HEALTHY, SYMMETRICAL, EVENLY AND DENSELY BRANCHED, AND DENSELY FOLIATED WHEN IN LEAF. THEY SHALL BE FREE OF BARK INJURY, DISEASE, AND INSECT PESTS. ALL TREES SHALL HAVE A STRAIGHT TRUNK WITH A SINGLE MAIN LEADER UNLESS OTHERWISE CHARACTERISTIC OF THE SPECIES OR VARIETY. THE OWNER OR LANDSCAPE ARCHITECT WILL ALLOW SUBSTITUTIONS ONLY UPON WRITTEN APPROVAL. SIZES SHALL CONFORM TO THE MEASUREMENT SPECIFIED ON THE DRAWINGS. PLANTS LARGER THAN SPECIFIED MAY BE USED IF APPROVED, BUT THE USE OF SUCH PLANTS SHALL NOT INCREASE THE CONTRACT PRICE. ALL OVERSTORY TREES PLANTED ALONG PARKING AREAS, SIDEWALKS AND PEDESTRIAN ACCESSES SHALL NOT BRANCH BELOW 7' FEET IF THE TREE CALIPER IS 3" INCHES OR GREATER. ALL PLANT MATERIALS ARE SUBJECT TO INSPECTION AND ACCEPTANCE BY THE OWNER OR LANDSCAPE ARCHITECT AT THE NURSERY SOURCE. THE CONTRACTOR SHALL COORDINATE SOURCE VISITS WITH THE LANDSCAPE ARCHITECT AND SHALL ACCOMPANY THE OWNER AND/OR LANDSCAPE ARCHITECT FOR ALL INSPECTIONS. CERTIFICATES OF COMPLIANCE WITH SPECIFICATIONS ARE REQUIRED FOR ALL PLANTS.

14. INSPECTION AND REVIEW:
ALL PLANT MATERIAL SHALL BE SUBJECT TO INSPECTION AND ACCEPTANCE BY THE OWNER OR LANDSCAPE ARCHITECT AT THE NURSERY SOURCE OR PLACE OF GROWTH. THE CONTRACTOR SHALL COORDINATE WITH THE LANDSCAPE ARCHITECT ON A SCHEDULE FOR SOURCE VISITS AND ACCOMPANY THE OWNER OR LANDSCAPE ARCHITECT FOR ALL SOURCE INSPECTIONS. CERTIFICATES OF COMPLIANCE ARE REQUIRED FOR ALL PLANT MATERIALS.
PHOTOGRAPHIC REVIEW OF PLANT MATERIAL IS ACCEPTABLE IF APPROVED BY LANDSCAPE ARCHITECT. PHOTOGRAPHS MUST BE PROVIDED IN QUANTITY AND VARIETY TO ALLOW LANDSCAPE ARCHITECT SUFFICIENT INFORMATION TO MAKE A REASONABLE DETERMINATION AS TO THE PLANTS' QUALITY. OWNER AND LANDSCAPE ARCHITECT RESERVES THE RIGHT TO REJECT PLANT MATERIAL DELIVERED TO THE SITE BUT PREVIOUSLY ACCEPTED IF DAMAGED OR NOT PROPERLY MAINTAINED DURING THE DELIVERY PROCESS.

15. PLANTING SEASONS (UNLESS OTHERWISE APPROVED BY THE OWNER OR LANDSCAPE ARCHITECT)

	SPRING	FALL
PLANTINGS	APRIL 1 TO JUNE 15	SEPTEMBER 1 TO OCTOBER 15
SEED MIXES	PER MANUFACTURERS RECOMMENDATIONS OR AS LISTED IN SEED MIX NOTES	

16. SEEDING MIXTURES: REFER TO SEED MIX NOTES.
SEEDED AREA SHALL BE ACCEPTED WHEN SEED AREA ACHIEVES 90% COVERAGE.

17. ALL SLOPES STEEPER THAN 3:1 RECEIVING A SEED MIX SHALL BE COVERED WITH AN EROSION CONTROL BLANKET OF STRAW FIBER AND BIODEGRADABLE OR PHOTODEGRADABLE NETTING.

18. UNLESS OTHERWISE NOTED IN DRAWING SET, NEW TREELINES SHALL EQUAL CLEARING AND GRUBBING LIMIT FOR CONSTRUCTION.

19. ALL DISTURBED AREAS NOT OTHERWISE DEVELOPED SHALL BE SEEDED WITH THE LAWN SEED MIX.

SEED MIX NOTES

A. LAWN SEEDING MIX:
   15 % PERENNIAL RYEGRASS (BLEND OF 3 IMPROVED HYBRIDS)
   25 % FINE LEAF OR CREEPING FESCUE (BLEND OF 3 IMPROVED HYBRIDS)
   60 % KENTUCKY BLUEGRASS (BLEND OF 3 IMPROVED HYBRIDS)
   SEEDING RATE: 5 LBS/1,000 S.F.
   SEEDING DATES: AUGUST 15 – OCTOBER 1 AND APRIL 15 – JUNE 30 UNLESS OTHERWISE APPROVED BY THE OWNER OR LANDSCAPE ARCHITECT.

B. CONSERVATION SEED MIX –
   ERNMX–111 – ERNST NATIVE HABITAT FOR STRIP MINES MIX
   ERNST SEEDS OR APPROVED EQUAL

   SPECIES: BIG BLUESTEM (ANDROPOGON GERARDII), SWITCH GRASS (PANICUM VIRGATUM), INDIAN GRASS (SORGHASTRUM NUTANS), VIRGINIA WILD RYE (ELYMUS VIRGINICUS), BLACK EYE SUSAN (RUDBECKIA HIRTA), PARTRIDGE PEA (CHAMAECRISTA FASCICULATA), OXEYE SUNFLOWER (HELIOPSIS HELIANTHOIDES), SHOWY TICKTREFOIL (DESMODIUM PANICULATUM), WILD BERGAMOT (MONARDA FISTULOSA), PANICLEDLEAF TICKTREFOIL (DESMODIUM PANICULATUM), NARROWLEAF MOUNTAINMINT (PYCNANTHEMUM TENUIFOLIUM), CANADA GOLDENROD (SOLIDAGO CANADENSIS).

   APPLICATION RATE: 20 LBS/ACRE: 2000 SF/LB
   SEEDING DATES: AUGUST 15 – OCTOBER 1 AND APRIL 15 – JUNE 30
   UNLESS OTHERWISE APPROVED BY THE OWNER OR LANDSCAPE ARCHITECT.

C. SLOPE SEED MIX –
   ERNMX–181 – NATIVE STEEP SLOPE MIX WITH ANNUAL RYEGRASS
   ERNST SEEDS OR APPROVED EQUAL

   SPECIES: INDIAN GRASS (SORGHASTRUM NUTANS), ANNUAL RYEGRASS (LOLIUM MULTIFLORUM), VIRGINIA WILD RYE (ELYMUS VIRGINICUS), BIG BLUESTEM (ANDROPOGON GERARDII), CANADA WILDRYE (ELYMUS CANADENSIS), AUTUMN BENTGRASS (AGROSTIS PERENNANS), SWITCH GRASS (PANICUM VIRGATUM), DEERTONGUE (PANICUM CLANDESTINUM), LITTLE BLUESTEM (SCHIZACHYRIUM SCOPARIUM), PARTRIDGE PEA (CHAMAECRISTA FASCICULATA), PURPLE CONEFLOWER (ECHINACHEA PURPUREA), PURPLETOP (TRIDENS FLAVUS), LANCELEAF COREOPSIS (COREOPSIS LANCEOLATA), BLACK EYE SUSAN (RUDBECKIA HIRTA), OXEYE SUNFLOWER (HELIOPSIS HELIANTHOIDES), WILD BERGAMOT (MONARDA FISTULOSA), SMOOTH BLUE ASTER (ASTER LAEVIS), NARROWLEAF MOUNTAINMINT (PYCNANTHEMUM TENUIFOLIUM), EARLY GOLDENROD (SOLIDAGO JUNCEA).

   APPLICATION RATE: 60 LBS/ACRE: 1000 SF/LB
   SEEDING DATES: AUGUST 15 – OCTOBER 1 AND APRIL 15 – JUNE 30
   UNLESS OTHERWISE APPROVED BY THE OWNER OR LANDSCAPE ARCHITECT.

D. DETENTION BASIN SEED MIX –
   ERNMX–183 – NATIVE DETENTION AREA MIX
   ERNST SEEDS OR APPROVED EQUAL

   SPECIES: SWITCHGRASS (PANICUM VIRGATUM), DEERTONGUE (PANICUM CLANDESTINUM), FOX SEDGE (CAREX VULPINOIDEA), VIRGINIA WILDRYE (ELYMUS VIRGINICUS), AUTUMN BENTGRASS (AGROSTIS PERENNANS), SOFT RUSH (JUNCUS EFFUSUS), REDTOP PANICGRASS (PANICUM RIGIDULUM).

   APPLICATION RATE: 20 LBS/ACRE: 2000 SF/LB
   SEEDING DATES: AUGUST 15 – OCTOBER 1 AND APRIL 15 – JUNE 30
   UNLESS OTHERWISE APPROVED BY THE OWNER OR LANDSCAPE ARCHITECT.

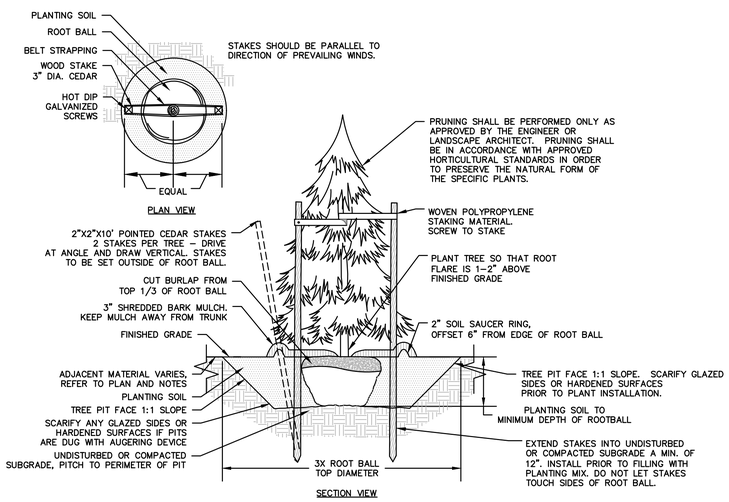

NOTES:
1. STAKING FOR TREES ON 4:1 SLOPES OR LESS TO BE PERFORMED AT CONTRACTOR'S DISCRETION.
2. WOVEN POLYPROPYLENE STAKING MATERIAL SHALL BE DEEPROOT ARBORTIE (GREEN) OR APPROVED EQUIVALENT. MATERIAL SHALL BE LOOPED AROUND TREE THROUGH EACH OTHER, TWISTED, AND SECURED TO THE STAKE. INSTALL SPECIFIED MATERIAL IN ACCORDANCE WITH MANUFACTURER'S DIRECTIONS.
3. BEFORE IN HOLE, REMOVE BOTTOM OF CAGE. ONCE IN HOLE, REMOVE REST OF CAGE FROM ROOT BALL. REMOVE TWINE AND BURLAP FROM TOP 1/3 OF ROOT BALL – SCORE REMAINING 2/3 OF BURLAP. IF BURLAP IS SYNTHETIC OR HAS BEEN TREATED WITH ANTI-DESICCANT, COMPLETELY REMOVE IT FROM ROOT BALL.

EVERGREEN TREE PLANTING

N.T.S

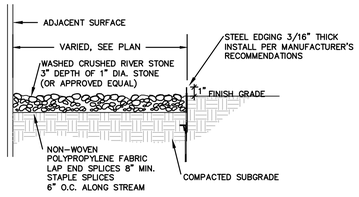

CRUSHED STONE DETAIL

N.T.S

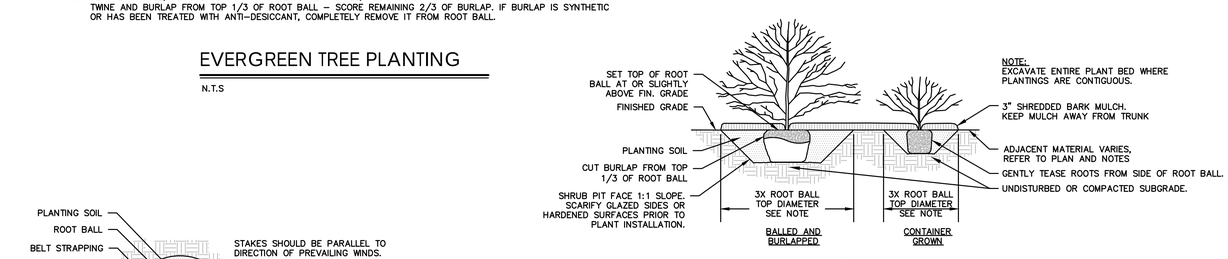

SHRUB PLANTING

N.T.S

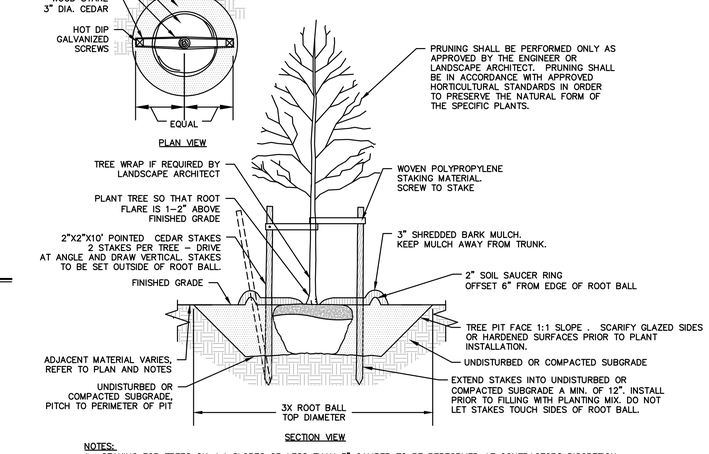

NOTES:
1. STAKING FOR TREES ON 4:1 SLOPES OR LESS THAN 3" CALIPER TO BE PERFORMED AT CONTRACTORS DISCRETION.
2. WOVEN POLYPROPYLENE STAKING MATERIAL SHALL BE DEEPROOT ARBORTIE (GREEN) OR APPROVED EQUIVALENT. MATERIAL SHALL BE LOOPED AROUND TREE THROUGH EACH OTHER, TWISTED, AND SECURED TO THE STAKE. INSTALL SPECIFIED MATERIAL IN ACCORDANCE WITH MANUFACTURER'S DIRECTIONS.
3. BEFORE IN HOLE, REMOVE BOTTOM OF CAGE. ONCE IN HOLE, REMOVE REST OF CAGE FROM ROOT BALL. REMOVE TWINE AND BURLAP FROM TOP 1/3 OF ROOT BALL – SCORE REMAINING 2/3 OF BURLAP. IF BURLAP IS SYNTHETIC OR HAS BEEN TREATED WITH ANTI-DESICCANT, COMPLETELY REMOVE IT FROM ROOT BALL.

DECIDUOUS TREE PLANTING

N.T.S

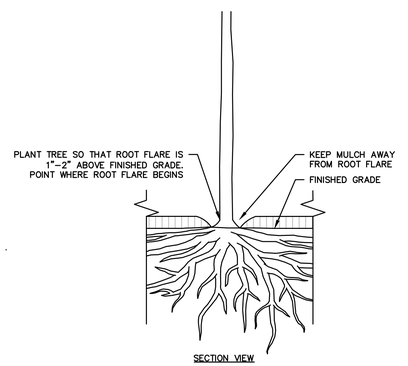

ROOT FLARE DIAGRAM

N.T.S

FOR PERMITTING PURPOSES ONLY
NOT RELEASED FOR CONSTRUCTION

© 2025 BL COMPANIES, INC. THESE DRAWINGS SHALL NOT BE UTILIZED BY ANY PERSON, FIRM OR CORPORATION WITHOUT THE SPECIFIC WRITTEN PERMISSION OF BL COMPANIES.

Architecture
Engineering
Environmental
Land Surveying
BL Companies
100 Constitution Plaza
10th Floor
Hartford, CT 06103
(860) 249-2200

STATE OF CONNECTICUT
TIMOTHY A. HOYT
25117
LICENSED PROFESSIONAL ENGINEER

PROPOSED MANUFACTURING / INDUSTRIAL DEVELOPMENT
50-58 RAINBOW ROAD
EAST GRANBY, CONNECTICUT 06026

No.	Date	REVISIONS	Desc.

Designed	J.C.W.
Drawn	N.Y.Y.
Reviewed	J.C.W.
Scale	NTS
Project No.	2300888
Date	06/03/2025
CAD File:	LL230088801

Title
LANDSCAPE NOTES AND DETAILS

Sheet No.
LL-9

Xref (s): I:\2023\00888\01 - XZ\230088801 - XC\230088801 - XC2\230088801 - XC3\230088802 - XL2\230088803 - XL3\230088804 - XC4\230088801 - 2024-2852 HWY - DS18-101 Preliminary

I:\2023\00888\01 - XZ\230088801 - XC\230088801 - XC2\230088801 - XC3\230088802 - XL2\230088803 - XL3\230088804 - XC4\230088801 - 2024-2852 HWY - DS18-101 Preliminary\CAD\LL230088801.DWG 6/3/2025 1:39:08 PM EDT

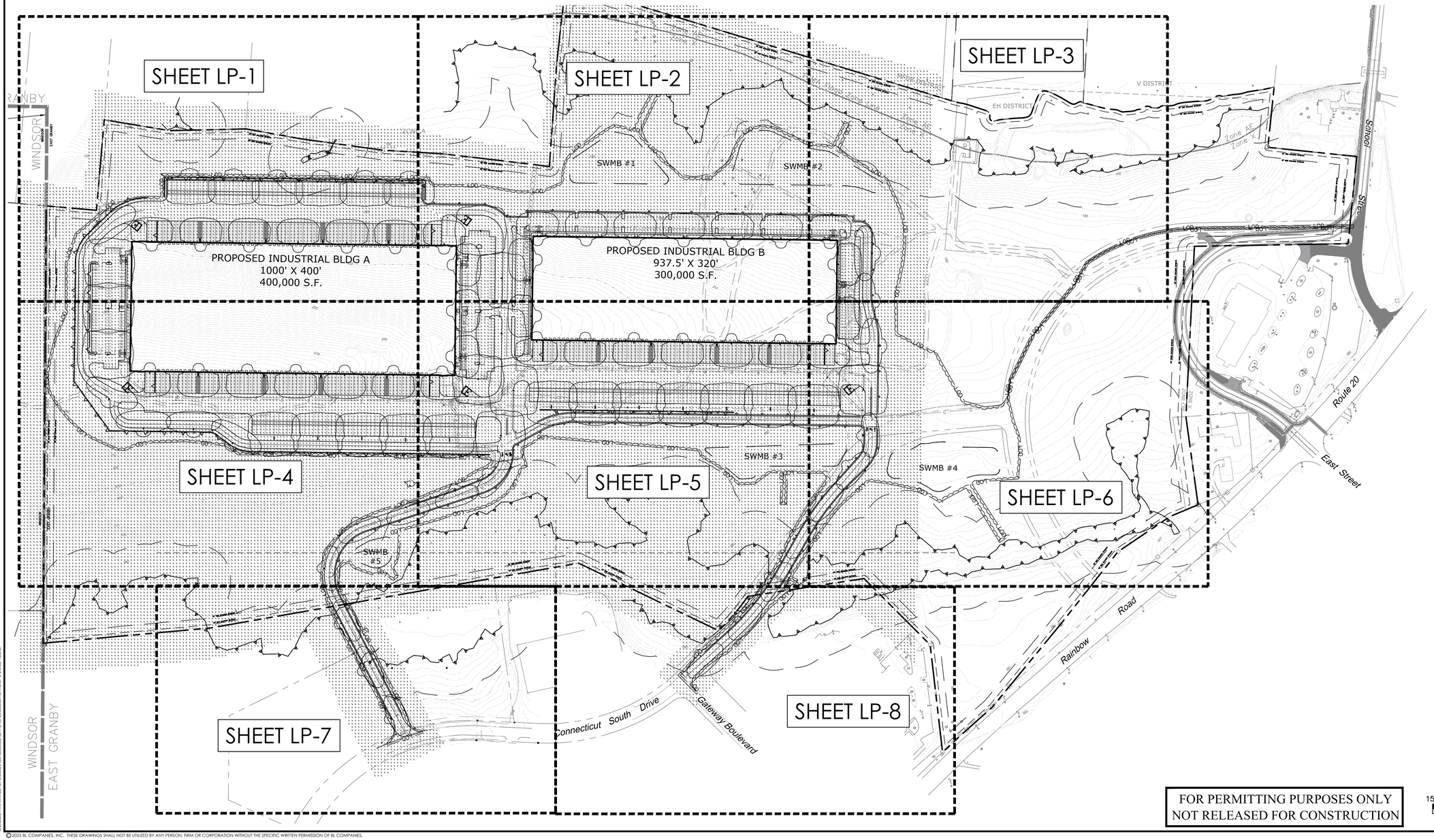

FOR PERMITTING PURPOSES ONLY
NOT RELEASED FOR CONSTRUCTION

GRAPHIC SCALE
150 75 0 150
SCALE IN FEET

© 2025 BL COMPANIES, INC. THESE DRAWINGS SHALL NOT BE UTILIZED BY ANY PERSON, FIRM OR CORPORATION WITHOUT THE SPECIFIC WRITTEN PERMISSION OF BL COMPANIES.

Architecture
Engineering
Environmental
Land Surveying

BL Companies

100 Constitution Plaza
10th Floor
Hartford, CT 06103
(860) 249-2200

STATE OF CONNECTICUT
TIMOTHY A. HOLL
31117
LICENSED
PROFESSIONAL ENGINEER

PROPOSED MANUFACTURING / INDUSTRIAL DEVELOPMENT

50-58 RAINBOW ROAD
EAST GRANBY, CONNECTICUT 06026

No.	Date	REVISIONS Desc.

Designed	J.S.D.
Drawn	J.S.D.
Reviewed	T.A.H.
Scale	1"=150'
Project No.	2300888
Date	06/03/2025
CAD File: LP230088801	

Title
OVERALL
LIGHTING PLAN

Sheet No.
LP-0

Xref (s) : BD2300888 01 : XZ230088801 : XC2300888 01 : XC230088801 : XC2300888 04 : 2024-2832 HWY : 0518-101 Preliminary

LAST SAVED: PHILIPPINEZ G:\JOBS\2023\JOB\2300888\SHEETS\LP2300888 01.DWG LP-0 2:04:06 PM EDT

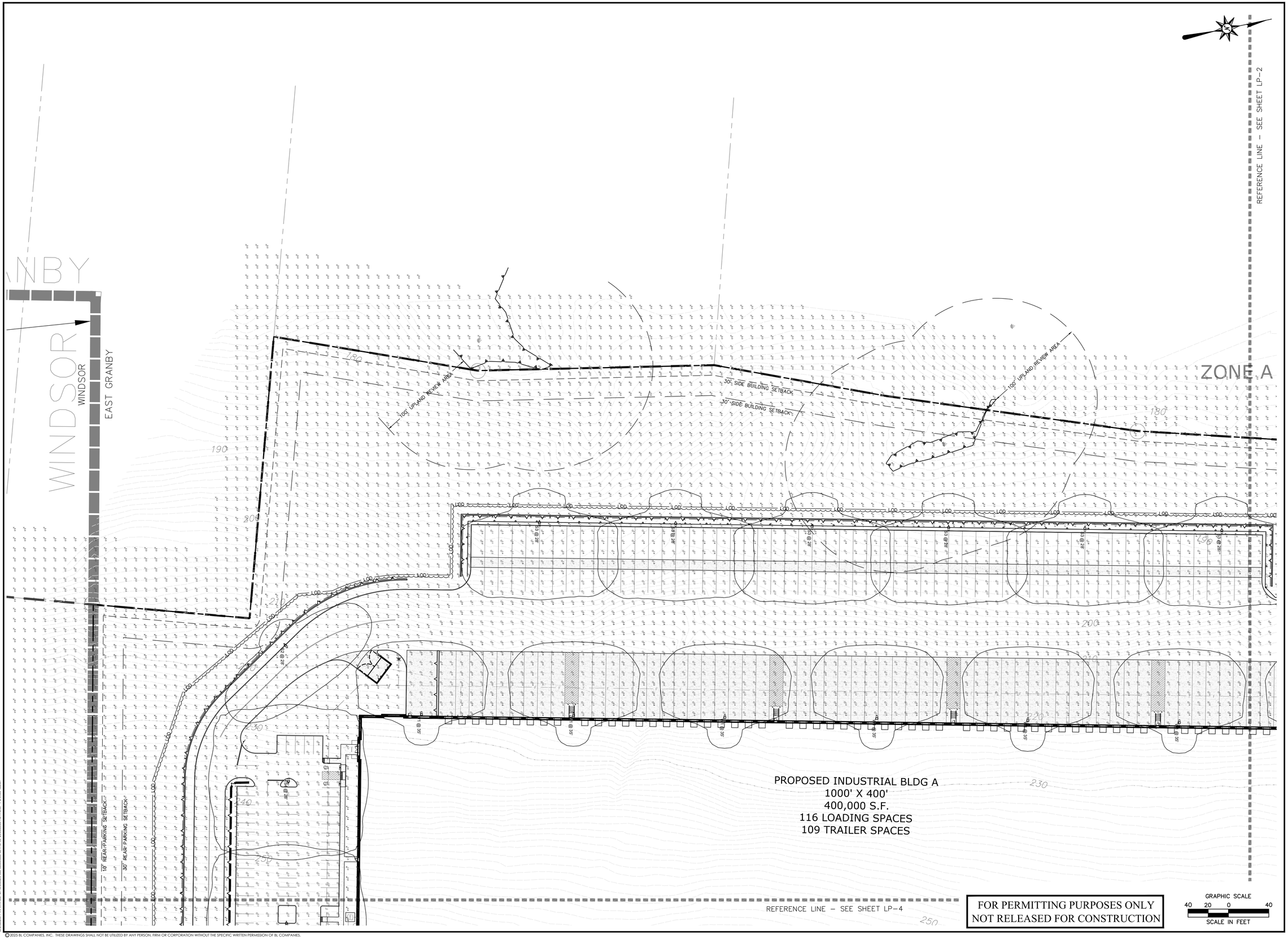

FOR PERMITTING PURPOSES ONLY
NOT RELEASED FOR CONSTRUCTION

Architecture
Engineering
Environmental
Land Surveying

BL Companies

100 Constitution Plaza
10th Floor
Hartford, CT 06103
(860) 249-2200

STATE OF CONNECTICUT
TIMOTHY A. HOULE
LICENSED
PROFESSIONAL ENGINEER

PROPOSED MANUFACTURING / INDUSTRIAL DEVELOPMENT

50-58 RAINBOW ROAD
EAST GRANBY, CONNECTICUT 06026

REVISIONS

No.	Date	Desc.

Designed	J.S.D.
Drawn	J.S.D.
Reviewed	T.A.H.
Scale	1"=40'
Project No.	2300888
Date	06/03/2025
CAD File: LP230088801	

Title

LIGHTING PLAN

Sheet No.

LP-1

Xref (s): : BD230088801 : XZ230088801 : XC230088801 : XE230088801 : XC230088803 : XC230088804 : 2024-2832 HWY : 0518-101 Preliminary

© 2025 BL COMPANIES, INC. THESE DRAWINGS SHALL NOT BE UTILIZED BY ANY PERSON, FIRM OR CORPORATION WITHOUT THE SPECIFIC WRITTEN PERMISSION OF BL COMPANIES.



FOR PERMITTING PURPOSES ONLY
NOT RELEASED FOR CONSTRUCTION

BL Companies
Architecture
Engineering
Environmental
Land Surveying

100 Constitution Plaza
10th Floor
Hartford, CT 06103
(860) 249-2200

STATE OF CONNECTICUT
TIMOTHY A. HOULE
LICENSED
PROFESSIONAL ENGINEER

PROPOSED MANUFACTURING / INDUSTRIAL DEVELOPMENT

50-58 RAINBOW ROAD
EAST GRANBY, CONNECTICUT 06026

REVISIONS

No.	Date	Desc.

Designed	J.S.D.
Drawn	J.S.D.
Reviewed	T.A.H.
Scale	1"=40'
Project No.	2300888
Date	06/03/2025
CAD File: LP230088801	

Title

LIGHTING PLAN

Sheet No.

LP-2

© 2025 BL COMPANIES, INC. THESE DRAWINGS SHALL NOT BE UTILIZED BY ANY PERSON, FIRM OR CORPORATION WITHOUT THE SPECIFIC WRITTEN PERMISSION OF BL COMPANIES.

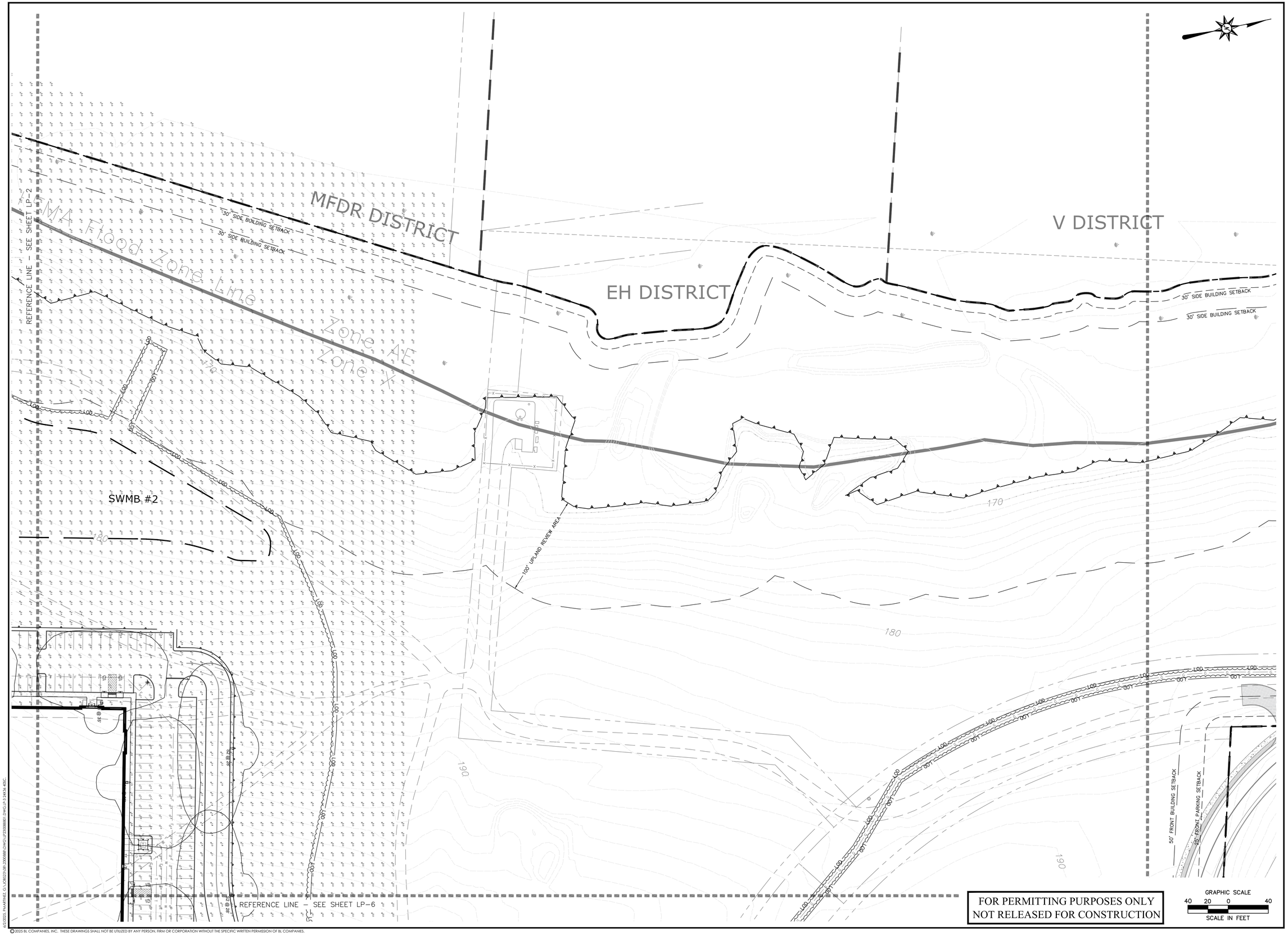

FOR PERMITTING PURPOSES ONLY
NOT RELEASED FOR CONSTRUCTION

Architecture
Engineering
Environmental
Land Surveying

BL Companies

100 Constitution Plaza
10th Floor
Hartford, CT 06103
(860) 249-2200

STATE OF CONNECTICUT
TIMOTHY A. HOULE
LICENSED
PROFESSIONAL ENGINEER

PROPOSED MANUFACTURING / INDUSTRIAL DEVELOPMENT

50-58 RAINBOW ROAD
EAST GRANBY, CONNECTICUT 06026

REVISIONS

No.	Date	Desc.

Designed	J.S.D.
Drawn	J.S.D.
Reviewed	T.A.H.
Scale	1"=40'
Project No.	2300888
Date	06/03/2025
CAD File: LP230088801	

Title

LIGHTING PLAN

Sheet No.

LP-3

Xref (s): : BD230088801 : XZ230088801 : XC230088801 : XC230088803 : XC230088804 : 2024-2832 HWY : 0518-101 Preliminary

© 2025 BL COMPANIES, INC. THESE DRAWINGS SHALL NOT BE UTILIZED BY ANY PERSON, FIRM OR CORPORATION WITHOUT THE SPECIFIC WRITTEN PERMISSION OF BL COMPANIES.

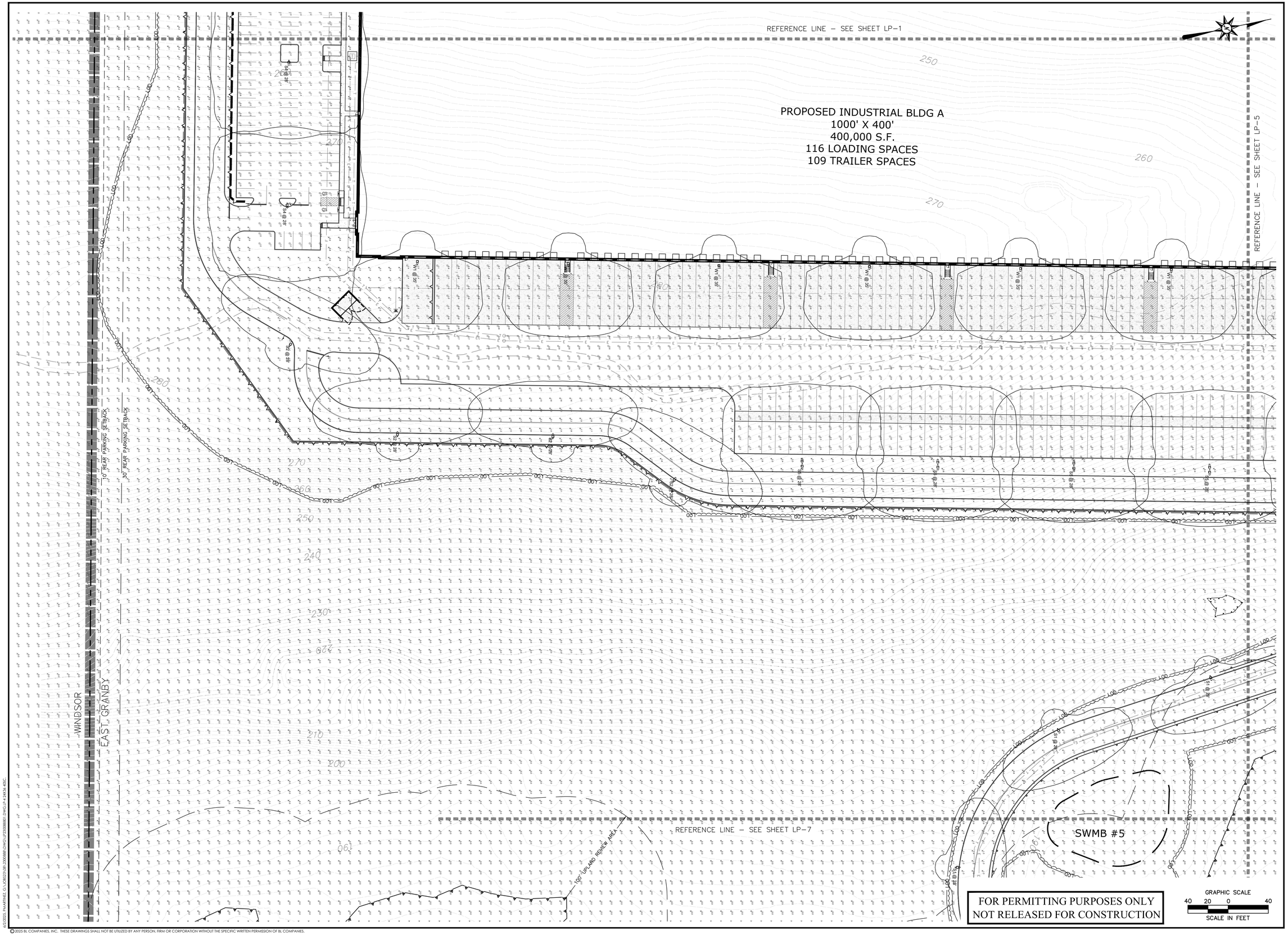

FOR PERMITTING PURPOSES ONLY
NOT RELEASED FOR CONSTRUCTION

Architecture
Engineering
Environmental
Land Surveying

BL Companies

100 Constitution Plaza
10th Floor
Hartford, CT 06103
(860) 249-2200

STATE OF CONNECTICUT
TIMOTHY A. HOULE
LICENSED
PROFESSIONAL ENGINEER

PROPOSED MANUFACTURING / INDUSTRIAL DEVELOPMENT

50-58 RAINBOW ROAD
EAST GRANBY, CONNECTICUT 06026

REVISIONS

No.	Date	Desc.

Designed	J.S.D.
Drawn	J.S.D.
Reviewed	T.A.H.
Scale	1"=40'
Project No.	2300888
Date	06/03/2025
CAD File:	LP230088801

Title

LIGHTING PLAN

Sheet No.

LP-4

© 2025 BL COMPANIES, INC. THESE DRAWINGS SHALL NOT BE UTILIZED BY ANY PERSON, FIRM OR CORPORATION WITHOUT THE SPECIFIC WRITTEN PERMISSION OF BL COMPANIES.

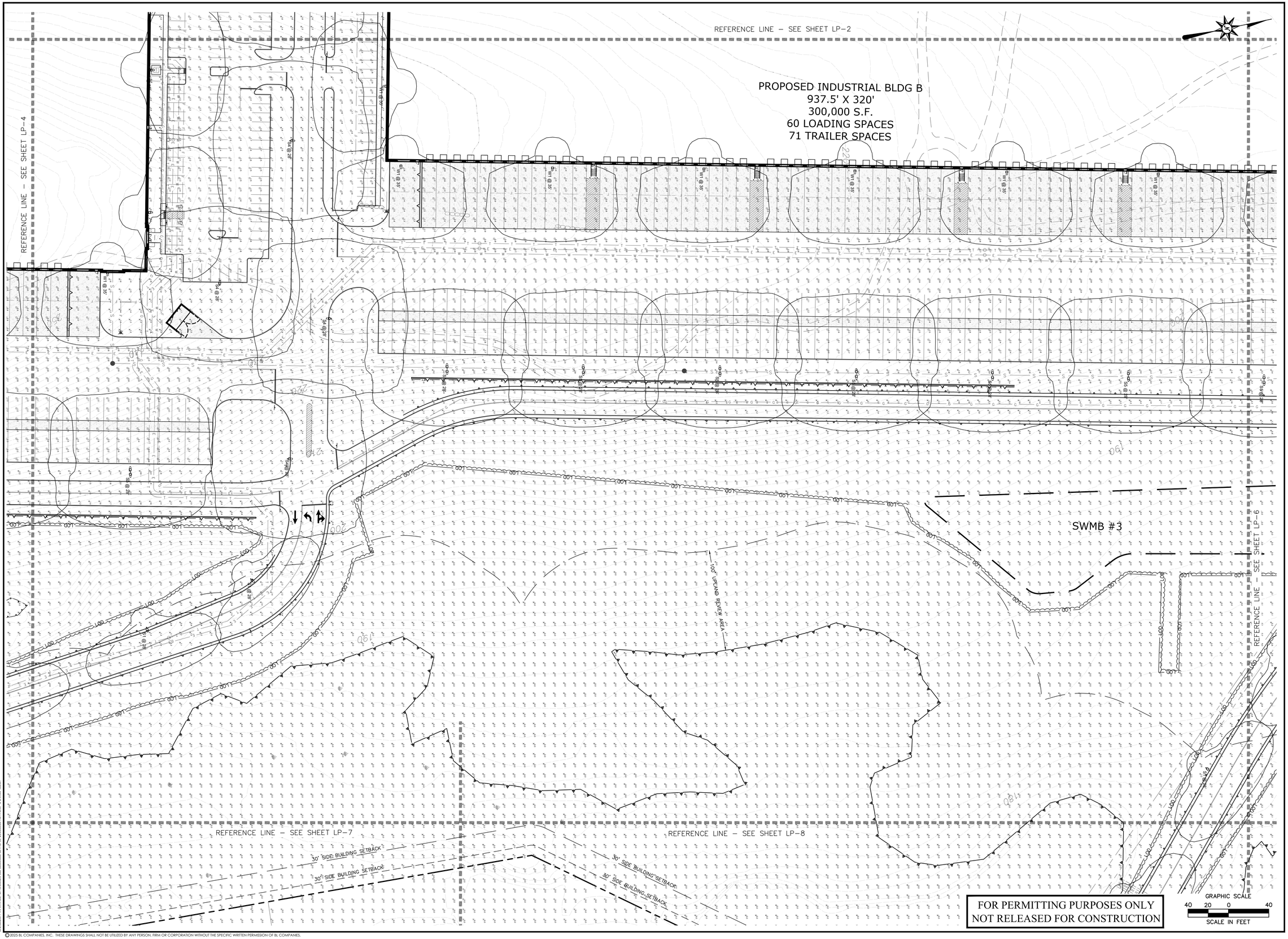

FOR PERMITTING PURPOSES ONLY
NOT RELEASED FOR CONSTRUCTION

© 2025 BL COMPANIES, INC. THESE DRAWINGS SHALL NOT BE UTILIZED BY ANY PERSON, FIRM OR CORPORATION WITHOUT THE SPECIFIC WRITTEN PERMISSION OF BL COMPANIES.

Architecture
Engineering
Environmental
Land Surveying

BL Companies

100 Constitution Plaza
10th Floor
Hartford, CT 06103
(860) 249-2200

STATE OF CONNECTION
TIMOTHY A. HOLL
29117
LICENSED
PROFESSIONAL ENGINEER

PROPOSED MANUFACTURING / INDUSTRIAL DEVELOPMENT

50-58 RAINBOW ROAD
EAST GRANBY, CONNECTICUT 06026

REVISIONS

No.	Date	Desc.

Designed	J.S.D.
Drawn	J.S.D.
Reviewed	T.A.H.
Scale	1"=40'
Project No.	2300888
Date	06/03/2025
CAD File: LP23008880	

Title

LIGHTING PLAN

Sheet No.

LP-5

Xref (s) : BD23008801 ; XC23008801 ; XC23008802 ; XC23008803 ; 2024-2832 HWY ; (518-10) Preliminary

J:\22025 PHANTREE GV LOBS\23 DR\23008801\DWG\LP23008801.DWG LP 24X36 ARC



FOR PERMITTING PURPOSES ONLY
NOT RELEASED FOR CONSTRUCTION

© 2025 BL COMPANIES, INC. THESE DRAWINGS SHALL NOT BE UTILIZED BY ANY PERSON, FIRM OR CORPORATION WITHOUT THE SPECIFIC WRITTEN PERMISSION OF BL COMPANIES.

BL Companies
Architecture
Engineering
Environmental
Land Surveying

100 Constitution Plaza
10th Floor
Hartford, CT 06103
(860) 249-2200

STATE OF CONNECTICUT
TIMOTHY A. HOULE
36117
LICENSED
PROFESSIONAL ENGINEER

PROPOSED MANUFACTURING / INDUSTRIAL DEVELOPMENT

50-58 RAINBOW ROAD
EAST GRANBY, CONNECTICUT 06026

REVISIONS

No.	Date	Desc.

Designed	J.S.D.
Drawn	J.S.D.
Reviewed	T.A.H.
Scale	1"=40'
Project No.	2300888
Date	06/03/2025
CAD File: LP230088801	

Title

LIGHTING PLAN

Sheet No.

LP-6

Xref (s): : BD230088801 : XC230088801 : XC230088801 : XC230088803 : XC230088804 : 2024-2832 HWY : 0518-101 Preliminary



FOR PERMITTING PURPOSES ONLY
NOT RELEASED FOR CONSTRUCTION

BL Companies
Architecture
Engineering
Environmental
Land Surveying

100 Constitution Plaza
10th Floor
Hartford, CT 06103
(860) 249-2200

STATE OF CONNECTICUT
TIMOTHY A. HOULE
38117
LICENSED
PROFESSIONAL ENGINEER

PROPOSED MANUFACTURING / INDUSTRIAL DEVELOPMENT

50-58 RAINBOW ROAD
EAST GRANBY, CONNECTICUT 06026

REVISIONS

No.	Date	Desc.

Designed	M.A.G
Drawn	M.A.G
Reviewed	T.A.H.
Scale	1"=40'
Project No.	2300888
Date	06/03/2025
CAD File: LP230088801	

Title

LIGHTING PLAN

Sheet No.

LP-7

Xref (s): : BD230088801 : XC230088801 : XC230088801 : XC230088803 : XC230088804 : 2024-2832 HWY : 0518-101 Preliminary

6/2/2025, PMARTINEZ, G:\JOBS23\08\2300888\DWG\LP230088801.DWG,LP-7 24X36 40SC.

© 2025 BL COMPANIES, INC. THESE DRAWINGS SHALL NOT BE UTILIZED BY ANY PERSON, FIRM OR CORPORATION WITHOUT THE SPECIFIC WRITTEN PERMISSION OF BL COMPANIES.

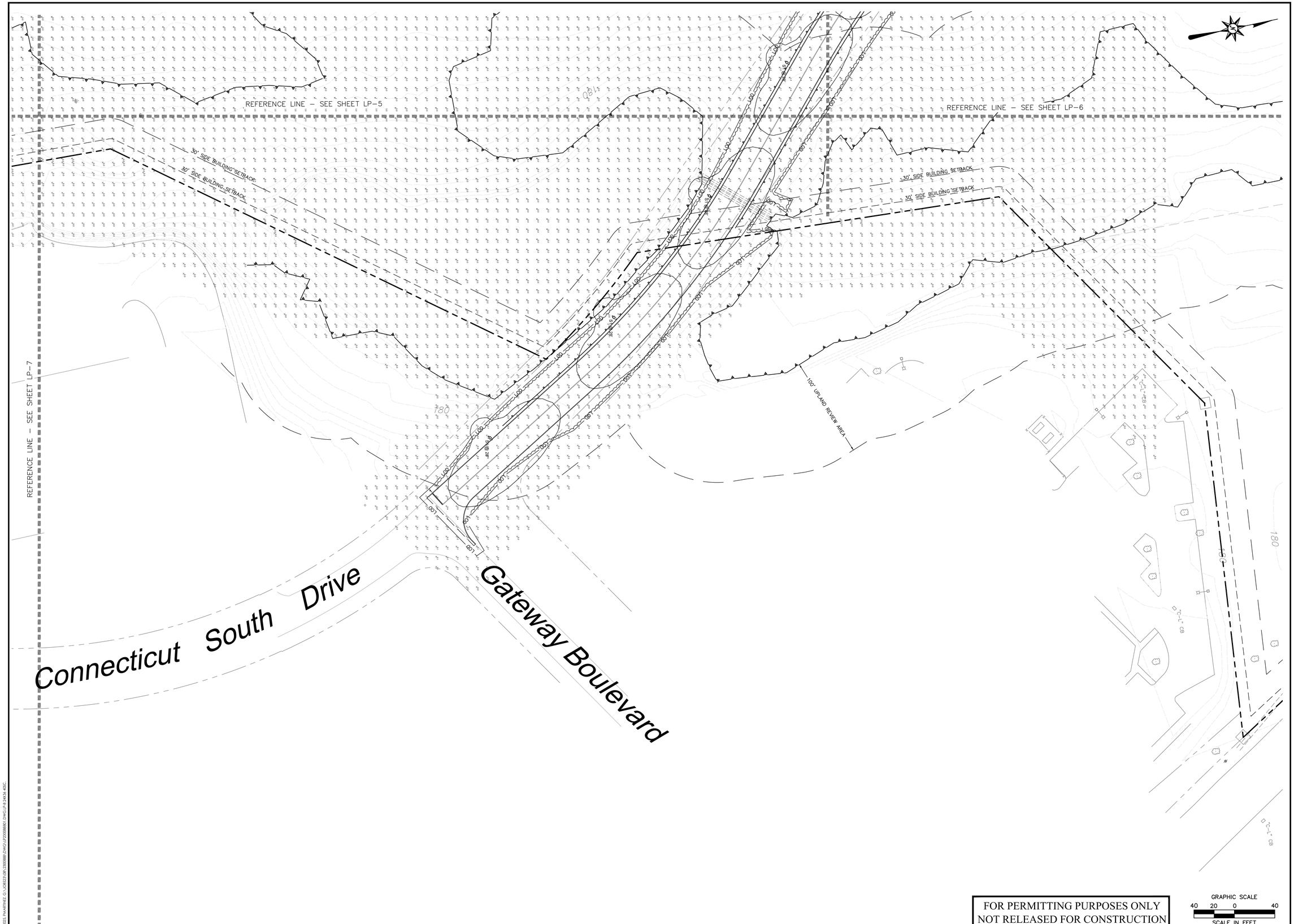

FOR PERMITTING PURPOSES ONLY
NOT RELEASED FOR CONSTRUCTION

GRAPHIC SCALE
40 20 0 40
SCALE IN FEET

BL Companies
Architecture
Engineering
Environmental
Land Surveying

100 Constitution Plaza
10th Floor
Hartford, CT 06103
(860) 249-2200

STATE OF CONNECTICUT
TIMOTHY A. HOULE
36114
LICENSED
PROFESSIONAL ENGINEER

PROPOSED MANUFACTURING / INDUSTRIAL DEVELOPMENT

50-58 RAINBOW ROAD
EAST GRANBY, CONNECTICUT 06026

REVISIONS

No.	Date	Desc.

Designed	M.A.G
Drawn	M.A.G
Reviewed	T.A.H.
Scale	1"=40'
Project No.	2300888
Date	06/03/2025
CAD File: LP230088801	

Title

LIGHTING PLAN

Sheet No.

LP-8

Xref (s): ; BD230088801 ; XC230088801 ; XC230088801 ; XC230088803 ; XC230088804 ; 2024-2832 HWY ; 0518-101 Preliminary

6/2/2025, PMARTINEZ, G:\JOBS23\09\2300888\DWG\LP230088801.DWG,LP-8 24X36 40SC.

© 2025 BL COMPANIES, INC. THESE DRAWINGS SHALL NOT BE UTILIZED BY ANY PERSON, FIRM OR CORPORATION WITHOUT THE SPECIFIC WRITTEN PERMISSION OF BL COMPANIES.



D-Series Size 1
LED Area Luminaire

dsseries

Catalog Number

Notes

Type

Hit the Tab key or mouse over the page to see all interactive elements.

Specifications

EPA:	0.69 ft² (0.06 m²)
Length:	32.71" (83.1 cm)
Width:	14.26" (36.2 cm)
Height H1:	7.88" (20.0 cm)
Height H2:	2.73" (6.9 cm)
Weight:	34 lbs (15.4 kg)

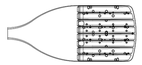





Introduction

The modern styling of the D-Series features a highly refined aesthetic that blends seamlessly with its environment. The D-Series offers the benefits of the latest in LED technology into a high performance, high efficacy, long-life luminaire.

The photometric performance results in sites with excellent uniformity, greater pole spacing and lower power density. D-Series outstanding photometry aids in reducing the number of poles required in area lighting applications with typical energy savings of 65% and expected service life of over 100,000 hours.

Ordering Information

EXAMPLE: DSX1 LED P7 40K 70CRI T3M MVOLT SPA NLTAIR2 PIRHN DDBXD

DSX1 LED

Series	LEDs	Color temperature[1]	Color Rendering Index[1]	Distribution	Voltage	Mounting
DSX1 LED	**Forward optics** P1 P6 P2 P7 P3 P8 P4 P9 P5 **Rotated optics** P10[1] P12[1] P11[1] P13[1]	(this section 70CRI only) 30K 3000K 40K 4000K 50K 5000K (this section 80CRI only, extended lead times apply) 27K 2700K 30K 3000K 35K 3500K 40K 4000K 50K 5000K	70CRI 70CRI 70CRI 80CRI 80CRI 80CRI 80CRI 80CRI	AFR Automotive front row T1S Type I short T2M Type II medium T3M Type III medium T3LG Type III low glare[1] T4M Type IV medium T4LG Type IV low glare[1] TFTM Forward throw medium T5M Type V medium T5LG Type V low glare T5W Type V wide BLC3 Type III backlight control[1] BLC4 Type IV backlight control[1] LCCO Left corner cutoff[1] RCCO Right corner cutoff[1]	MVOLT (120V-277V)[1,4] HVOLT (347V-480V)[1,5] XVOLT (277V - 480V)[1,9] 120[1,6,10] 208[1,6,9] 240[1,6,9] 277[1,6,9] 347[1,6,9] 480[1,6,9]	**Shipped included** SPA Square pole mounting (#8 drilling) RPA Round pole mounting (#8 drilling) SPA5 Square pole mounting #5 drilling[1] RPA5 Round pole mounting #5 drilling[1] SPABN Square narrow pole mounting #8 drilling WBA Wall bracket[10] MA Mast arm adapter (mounts on 2 3/8" OD horizontal tenon)

Control options		Other options		Finish (required)	
Shipped installed		**Shipped installed**		DDBXD	Dark Bronze
NLTAIR2 PIRHN	nLight AIR gen 2 enabled with bi-level motion / ambient sensor, 8–40' mounting height, ambient sensor enabled at 2fc.[11,12,26,27]	SPD20KV	20KV surge protection	DBLXD	Black
PIR	High/low, motion/ambient sensor, 8–40' mounting height, ambient sensor enabled at 2fc.[11,26,27]	HS	Houseside shield (black finish standard)[22]	DNAXD	Natural Aluminum
PER	NEMA twist-lock receptacle only (controls ordered separate)[14]	L90	Left rotated optics[1]	DWHXD	White
PERS	Five-pin receptacle only (controls ordered separate)[14,21]	R90	Right rotated optics[1]	DDBTXD	Textured dark bronze
PER7	Seven-pin receptacle only (controls ordered separate)[14,21]	CCE	Coastal Construction[23]	DBLBXD	Textured black
FAO	Field adjustable output[15,25]	HA	50°C ambient operation[24]	DNATXD	Textured natural aluminum
BL30	Bi-level switched dimming, 30%[16,25]	BAA	Buy American(n) Act Compliant	DWHGXD	Textured white
BL50	Bi-level switched dimming, 50%[16,25]	SF	Single fuse (120, 277, 347V)[9]		
DMG	0-10v dimming wires pulled outside fixture (for use with an external control, ordered separately)[17]	DF	Double fuse (208, 240, 480V)[9]		
DS	Dual switching[18,19,25]	**Shipped separately**			
		EGSR	External Glare Shield (reversible, field install required, matches housing finish)		
		BSDB	Bird Spikes (field install required)		

© 2011-2023 Acuity Brands Lighting, Inc. All rights reserved.

Schedule										
Symbol	Label	QTY	Manufacturer	Catalog Number	Description	Number Lamps	Lumens per Lamp	LLF	Wattage	Distribution
	S1	15	Lithonia Lighting	DSX1 LED P3 30K 80CRI T2M	D-Series Size 1 Area Luminaire P3 Performance Package 3000K CCT 80 CRI Type 2 Medium	1	11851	0.9	102.17	TYPE III, MEDIUM, BUG RATING: B2 - U0 - G3
	S2	8	Lithonia Lighting	DSX1 LED P6 30K 80CRI T2M	D-Series Size 1 Area Luminaire P6 Performance Package 3000K CCT 80 CRI Type 2 Medium	1	17686	0.9	165.25	TYPE III, MEDIUM, BUG RATING: B3 - U0 - G4
	S3	6	Lithonia Lighting	DSX1 LED P8 30K 80CRI T4M	D-Series Size 1 Area Luminaire P8 Performance Package 3000K CCT 80 CRI Type 4 Medium	1	24780	0.9	215.77	TYPE IV, MEDIUM, BUG RATING: B3 - U0 - G5
	S4	10	Lithonia Lighting	DSX1 LED P9 30K 80CRI T5W	D-Series Size 1 Area Luminaire P9 Performance Package 3000K CCT 80 CRI Type 5 Wide	1	31432	0.9	277.07	TYPE VS, BUG RATING: B5 - U0 - G4
	S5 - TWIN MOUNT CONFIGURATION. SEE S5-A AND S5-B FOR FIXTURE TYPE.									
	S5-A	12	Lithonia Lighting	DSX1 LED P8 30K 80CRI T4M	D-Series Size 1 Area Luminaire P8 Performance Package 3000K CCT 80 CRI Type 4 Medium	1	24780	0.9	215.77	TYPE IV, MEDIUM, BUG RATING: B3 - U0 - G5
	S5-B	12	Lithonia Lighting	DSX1 LED P3 30K 80CRI T2M	D-Series Size 1 Area Luminaire P3 Performance Package 3000K CCT 80 CRI Type 2 Medium	1	11851	0.9	102.17	TYPE III, MEDIUM, BUG RATING: B2 - U0 - G3
	W1	35	Lithonia Lighting	DSX1 LED P7 30K 80CRI T4M	D-Series Size 1 Area Luminaire P7 Performance Package 3000K CCT 80 CRI Type 4 Medium	1	19634	0.9	184.43	TYPE IV, MEDIUM, BUG RATING: B3 - U0 - G5

Statistics						
Description	Symbol	Avg	Max	Min	Max/Min	Avg/Min
PARKING (WAREHOUSE A CAR)		1.1 fc	1.9 fc	0.5 fc	3.8:1	2.2:1
PARKING (WAREHOUSE A TRUCK)		1.1 fc	3.5 fc	0.6 fc	5.8:1	1.8:1
PARKING (WAREHOUSE B EAST)		1.1 fc	3.4 fc	0.5 fc	6.8:1	2.2:1
PARKING (WAREHOUSE B NORTH)		1.5 fc	2.3 fc	1.0 fc	2.3:1	1.5:1
PARKING (WAREHOUSE B SOUTH)		1.2 fc	1.6 fc	0.9 fc	1.8:1	1.3:1
PARKING (WAREHOUSE B WEST)		1.1 fc	2.9 fc	0.6 fc	4.8:1	1.8:1
SITE/LANDSCAPE		0.3 fc	4.3 fc	0.0 fc	N/A	N/A
SPILL		0.0 fc	1.4 fc	0.0 fc	N/A	N/A

LIGHTING NOTES

1. ALL WORK SHALL BE DONE IN STRICT ACCORDANCE WITH ALL REQUIREMENTS OF ANY LOCAL APPLICABLE CODES OR ORDINANCES, PUBLIC UTILITY COMPANY REGULATIONS, STATE CODE, AND NATIONAL ELECTRICAL CODE WITH INTERIM AMENDMENTS THERETO.

2. ALL MATERIALS SHALL CONFORM TO THE LATEST ISSUE OF ALL APPLICABLE STANDARDS AS ESTABLISHED BY EEI, NEMA, ASTM, IPCEA, NATIONAL BOARD OF FIRE UNDERWRITERS, AND UNDERWRITERS LABORATORIES, INC.

3. THE CONTRACTOR SHALL TEST THE LIGHTING AFTER INSTALLATION WITH THE DEVELOPER/OWNER, AND PROVIDE TO DEVELOPER/OWNER WARRANTY AND MAINTENANCE INFORMAITON. THE CONTRACTOR SHALL MAKE ADJUSTMENTS AND/OR MODIFICATIONS AS REQUIRED BY THE DEVELOPER/OWNER TO OBTAIN EVEN LIGHT DISTRIBUTION.

4. CONTRACTOR SHALL LEAVE ENTIRE ELECTRICAL SYSTEM INSTALLED BY THE CONTRACTOR IN PROPER WORKING CONDITION AND REPLACE WITHOUT ADDITIONAL CHARGE ALL WORK OR MATERIALS WHICH MAY DEVELOP DEFECTS WITHIN A PERIOD OF ONE (1) YEAR FROM DATE OF FINAL ACCEPTANCE BY THE OWNER.

5. THE CONTRACTOR SHALL SUBMIT SHOP DRAWINGS OF ALL PRODUCTS, BASES AND CONDUITS TO SITE ENGINEER FOR REVIEW AND APPROVAL PRIOR TO DELIVERY OF MATERIAL TO SITE. ALLOW A MINIMUM OF 14 WORKING DAYS FOR REVIEW. IF ALTERNATIVE LIGHTING IS PROPOSED SUBMIT A PHOTOMETRIC FOOT-CANDLE LAYOUT ALONG WITH ANNUAL MAINTENANCE REQUIREMENTS AND ANTICIPATED COSTS.

6. LIGHTS ARE DESIGNED TO PROVIDE EVEN LEVELS OF ILLUMINATION AND AVOID GLARE ONTO NEIGHBORING PROPERTIES. FINAL DESIGN MAY VARY PENDING MANUFACTURER'S RECOMMENDATIONS.

7. ALL LIGHTING CONTROLS, PANELS, CIRCUIT BREAKERS ETC. ARE TO BE PROVIDED UNDER A SEPARATE CONTRACT BY BUILDING CONTRACTOR. CAREFUL COORDINATION IS REQUIRED BETWEEN SITE CONTRACTOR AND BUILDING CONTRACTOR TO PROVIDE A COMPLETE INSTALLATION FOR SITE LIGHTING.

8. THE CONTRACTOR WILL PROVIDE AND INSTALL ALL MATERIAL NECESSARY TO COMPLETE THE SITE LIGHTING SYSTEM INCLUDING BUT NOT LIMITED TO CONDUIT, BASES, ANCHOR BOLTS, POLES, SITE LIGHTS AND LAMPS. THE CONTRACTOR WILL COORDINATE WIRING AND POWERING OF LIGHTS WITH OWNER, ARCHITECT, AND BUILDING CONTRACTOR IF DIFFERENT FROM THE SITE CONTRACTOR.

9. ALL LIGHTS TO BE AS LISTED IN SCHEDULE OR APPROVED EQUIVALENT. LIGHTS SHALL BE MOUNTED ON SQUARE STRAIGHT STEEL POLES ATOP CONCRETE BASES THAT ARE SET 3' (CLEAR) BEHIND CURBS UNLESS OTHERWISE INDICATED ON CONTRACT DRAWINGS. ILLUMINATION ANALYSIS MODELED USING LIGHTING FIXTURES LISTED IN SCHEDULE.

10. LIGHT POLES AND BRACKETS TO BE AS SHOWN ON DETAILS OR APPROVED EQUIVALENT.

11. WIRE AND CABLE SHALL BE COPPER AND CONFORM TO THE FOLLOWING NEC TYPE THHN/THWN SOLID FOR NO. 12 AND NO. 10. NEC TYPE THHN/THWN STRANDED FOR NO. 8 AND LARGER. RIGID STEEL CONDUIT SHALL BE GALVANIZED. FITTINGS SHALL BE CAST FERROUS MATERIAL WITH A CADMIUM OR ZINC PLATED FINISH.

12. ALL EQUIPMENT SHALL BE GROUNDED AND BONDED IN ACCORDANCE TO NEC.

13. ANY POLES THAT ARE NOT LOCATED ON INACCESSIBLE OR LANDSCAPED AREAS MUST BE PAINTED SAFETY YELLOW AT THE LIGHT POLE BASE. LIGHT POSTS SHALL BE ALIGNED WITH PARKING STRIPES.

14. ALL LIGHTS WITH A 25–FT MOUNTING HEIGHT OR GREATER SHALL RECEIVE A FACTORY INSTALLED VIBRATION DAMPENER.

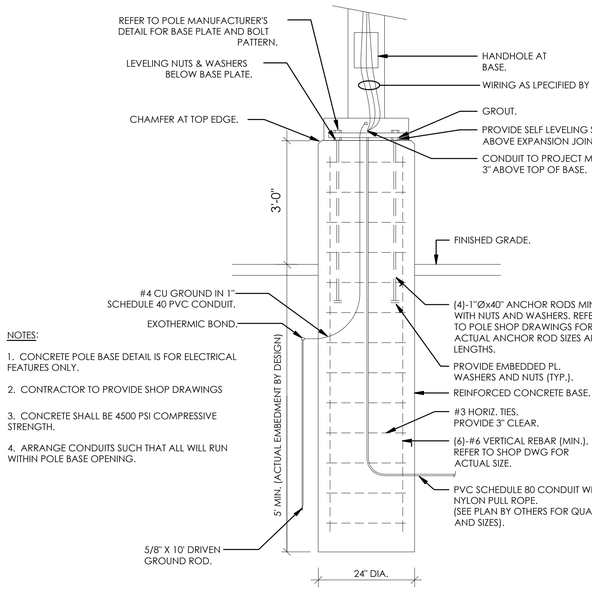

NOTES:

1. CONCRETE POLE BASE DETAIL IS FOR ELECTRICAL FEATURES ONLY.
2. CONTRACTOR TO PROVIDE SHOP DRAWINGS
3. CONCRETE SHALL BE 4500 PSI COMPRESSIVE STRENGTH.
4. ARRANGE CONDUITS SUCH THAT ALL WILL RUN WITHIN POLE BASE OPENING.

TYPICAL CONCRETE LIGHT POLE BASE DETAIL

N.T.S

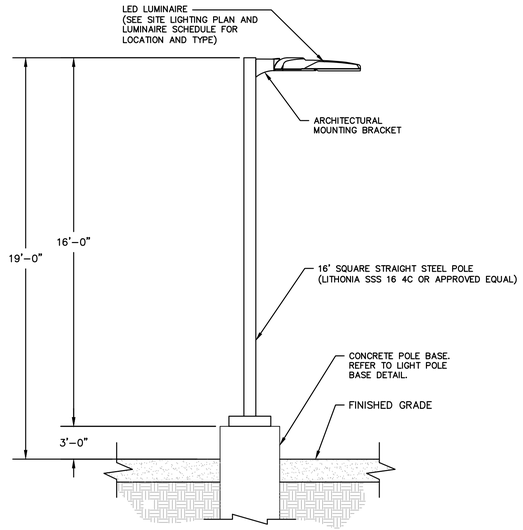

LUMINAIRE MOUNTING DETAIL (RESIDENTIAL)

N.T.S

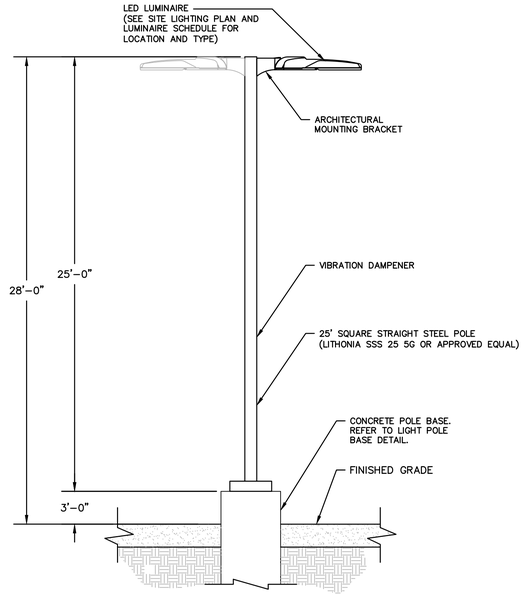

LUMINAIRE MOUNTING DETAIL (WAREHOUSE)

N.T.S

FOR PERMITTING PURPOSES ONLY
NOT RELEASED FOR CONSTRUCTION

© 2025 BL COMPANIES, INC. THESE DRAWINGS SHALL NOT BE UTILIZED BY ANY PERSON, FIRM OR CORPORATION WITHOUT THE SPECIFIC WRITTEN PERMISSION OF BL COMPANIES.

Architecture
Engineering
Environmental
Land Surveying

BL Companies

100 Constitution Plaza
10th Floor
Hartford, CT 06103
(860) 249-2200

STATE OF CONNECTICUT
JAMES A. VOLPE
28119
LICENSED PROFESSIONAL ENGINEER

PROPOSED MANUFACTURING / INDUSTRIAL DEVELOPMENT
50-58 RAINBOW ROAD
EAST GRANBY, CONNECTICUT 06026

REVISIONS

No.	Date	Desc.

Designed	J.S.D.
Drawn	J.S.D.
Reviewed	T.A.H.
Scale	N.T.S.
Project No.	2300888
Date	06/03/2025
CAD File: LP230088801	

Title

LIGHTING NOTES AND DETAILS

Sheet No.

LP-9

Xref (s) : BD230088801 ; XZ230088801 ; XC230088801 ; XE230088801 ; XC230088801 ; XC230088804 ; 2024-2832 HWY (1518-101 Preliminary

J:\2023\23_PHANTHREE_G_WORKSPACE\BL\2300888\DWG\LP2300888801.DWG | LP-9 | ENOA, HTR,

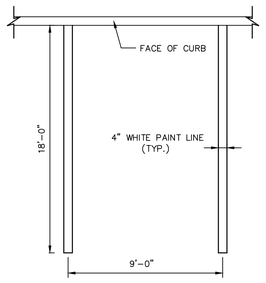

NOTE:
1. PROVIDE 2 COATS OF PAINT ON ALL SURFACES.
2. SEE PLAN FOR ACTUAL SPACE LOCATION AND DIMENSIONS.

TYPICAL PARKING SPACE DETAIL

N.T.S. BLPC–003

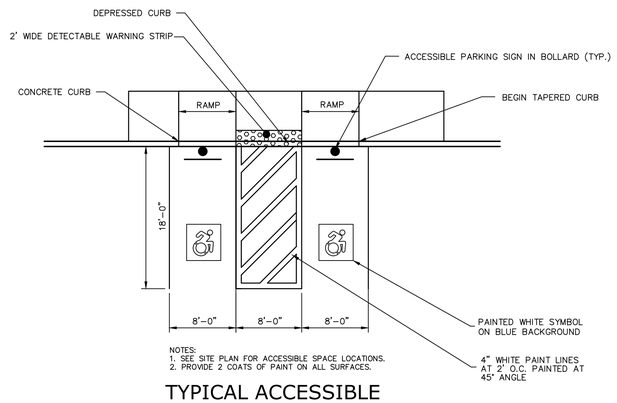

NOTES:
1. SEE SITE PLAN FOR ACCESSIBLE SPACE LOCATIONS.
2. PROVIDE 2 COATS OF PAINT ON ALL SURFACES.

TYPICAL ACCESSIBLE PARKING SPACE AND RAMP DETAIL

N.T.S. BLPC–004

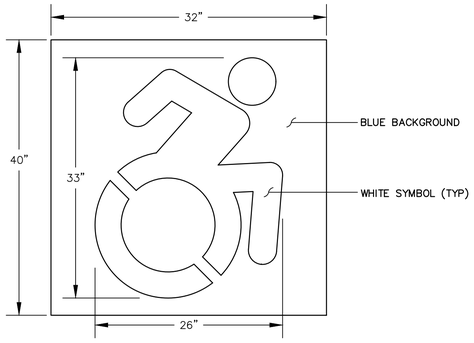

NOTE: HANDICAP SYMBOL TO ADHERE TO STATE BUILDING CODE, LATEST EDITION

CONNECTICUT SYMBOL OF ACCESSIBILITY

N.T.S.

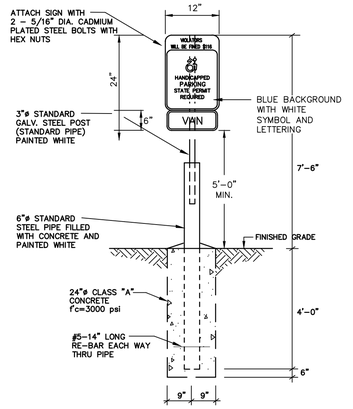

HANDICAP SIGN BOLLARD DETAIL

N.T.S.

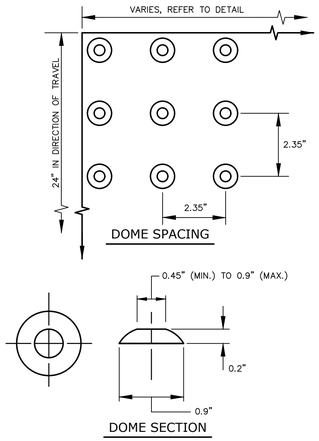

DETECTABLE WARNING

N.T.S.

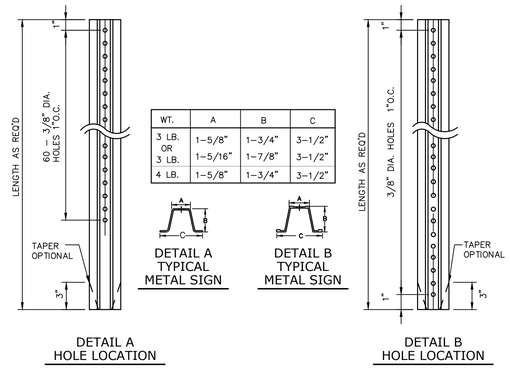

WT.	A	B	C
3 LB. OR 3 LB.	1–5/8"	1–3/4"	3–1/2"
	1–5/16"	1–7/8"	3–1/2"
4 LB.	1–5/8"	1–3/4"	3–1/2"

DETAIL A HOLE LOCATION

DETAIL B HOLE LOCATION

NOTES:
STEEL FOR POSTS SHALL CONFORM TO THE MECHANICAL REQUIREMENTS OF ASTM A 499–81 GRADE 60 AND TO THE CHEMICAL REQUIREMENTS OF ASTM AI–76 CARBON STEEL TEE RAIL HAVING NOMINAL WEIGHT OF "91 LBS OR GREATER PER LINEAR YARD.

AFTER FABRICATION ALL STEEL POSTS SHALL BE GALVANIZED TO MEET THE REQUIREMENTS OF ASTM A–123.

SIGN MOUNTING HEIGHT TO BE APPROVED BY THE ENGINEER.

TYPICAL METAL SIGN POSTS

N.T.S. BLSD–001

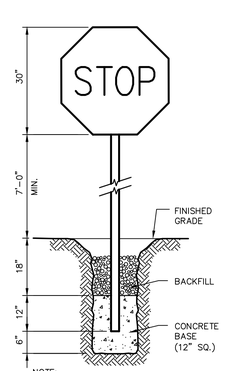

NOTE:
CONSTRUCT SIGN IN ACCORDANCE WITH DOT SPECIFICATIONS.

STOP SIGN

N.T.S. BLSD–002

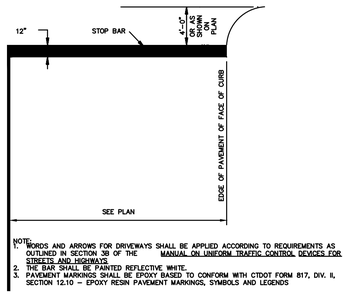

NOTE:
1. WORDS AND ARROWS FOR DRIVEWAYS SHALL BE APPLIED ACCORDING TO REQUIREMENTS AS OUTLINED IN SECTION 38 OF THE MANUAL ON UNIFORM TRAFFIC CONTROL DEVICES FOR STREETS AND HIGHWAYS.
2. THE BAR SHALL BE PAINTED REFLECTIVE WHITE.
3. PAVEMENT MARKINGS SHALL BE EPOXY BASED TO CONFORM WITH CTDOT FORM 817, DIV. II, SECTION 12.10 – EPOXY RESIN PAVEMENT MARKINGS, SYMBOLS AND LEGENDS

STOP BAR PAVEMENT MARKING

N.T.S.

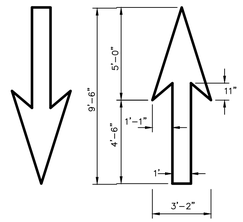

12.5 S.F.

(WHITE)
(ARROWS TO BE CENTERED IN TRAVEL LANE)

PAVEMENT ARROW DETAILS

N.T.S. BLPC–006

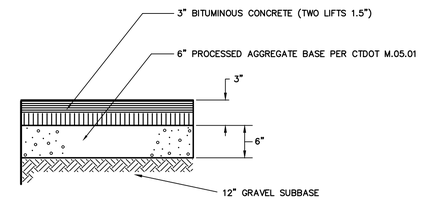

STANDARD DUTY BITUMINOUS CONCRETE PAVEMENT STRUCTURE

N.T.S.

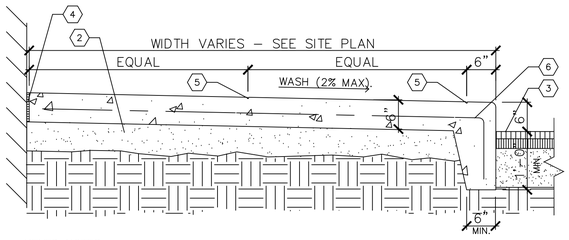

KEYED NOTES

1. N/A
2. 4" COMPACTED AGGREGATE BASE
3. PAVEMENT.
4. COMPRESSIBLE FILLER (3/4" MAXIMUM). CUT BACK AND PROVIDE SEALANT, TYPICAL, AT ALL JOINTS WITH FILLER.
5. 1/4" TOOLED JOINT
6. 6" X 6" #10 W.W.F.

NOTE: EXPANSION JOINT 20' O.C. MAXIMUM. 1/4" TOOL JOINT 4' O.C. OR AS DIRECTED. CONCRETE TO BE 4000 P.S.I.

MONOLITHIC CONCRETE CURB AND SIDEWALK DETAIL

N.T.S. WAG

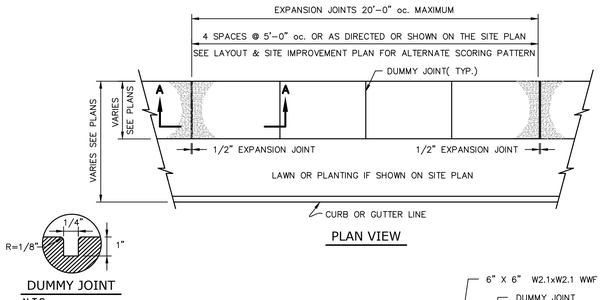

PLAN VIEW

DUMMY JOINT

N.T.S.

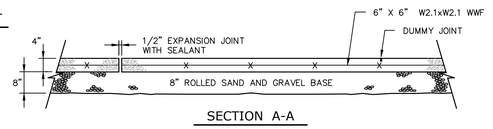

SECTION A-A

CONCRETE SIDEWALK DETAIL

N.T.S. BLSR–001

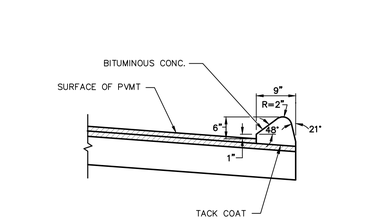

BITUMINOUS CONCRETE CURB

N.T.S.

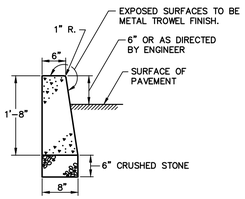

NOTES:
1. CONSTRUCTION JOINTS SHALL BE SPACED APPROXIMATELY EVERY 10 FEET BUT NOT LESS THAN 6 FEET. 1/4" THICK PREFORMED EXPANSION JOINT FILLER SHALL BE INSTALLED EVERY OTHER JOINT.
2. FORMWORK SHALL REMAIN IN PLACE FOR 24 HOURS FOLLOWING CONCRETE POURING.

CONCRETE CURB DETAIL

N.T.S. ZPC–014

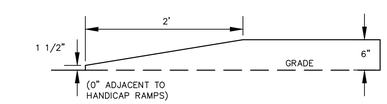

TRANSITION CURB

N.T.S.

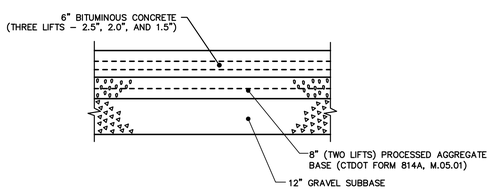

HEAVY DUTY BITUMINOUS CONCRETE PAVEMENT STRUCTURE

N.T.S.

FOR PERMITTING PURPOSES ONLY
NOT RELEASED FOR CONSTRUCTION

© 2025 BL COMPANIES, INC. THESE DRAWINGS SHALL NOT BE UTILIZED BY ANY PERSON, FIRM OR CORPORATION WITHOUT THE SPECIFIC WRITTEN PERMISSION OF BL COMPANIES.

Architecture
Engineering
Environmental
Land Surveying
BL Companies
100 Constitution Plaza
10th Floor
Hartford, CT 06103
(860) 249-2200

STATE OF CONNECTICUT
TIMOTHY A. VOLEK
29117
LICENSED PROFESSIONAL ENGINEER

PROPOSED MANUFACTURING / INDUSTRIAL DEVELOPMENT

50-58 RAINBOW ROAD
EAST GRANBY, CONNECTICUT 06026

REVISIONS

No.	Date	Desc.

Designed	M.A.G.
Drawn	M.A.G.
Reviewed	
Scale	NONE
Project No.	2300888
Date	06/03/2025
CAD File: DN230088801	

Title

DETAILS

Sheet No.

DN-1

Xref (s): - BI2300888801

(C) 2025 BL COMPANIES, INC. | G:\2023\2300888\DWG\DN230088801.DWG | Dec 01, 2025 - 2:40p

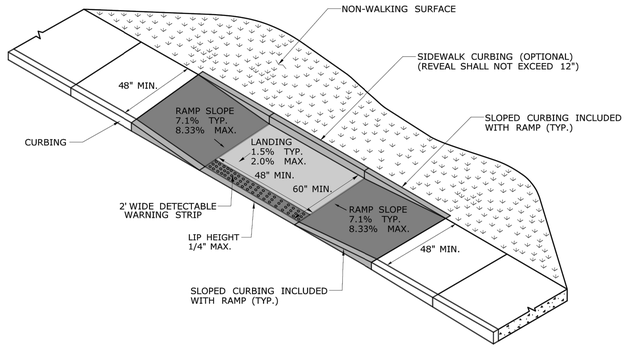

PARALLEL RAMP WITHOUT NON-WALKING SURFACE (TYPE 9)

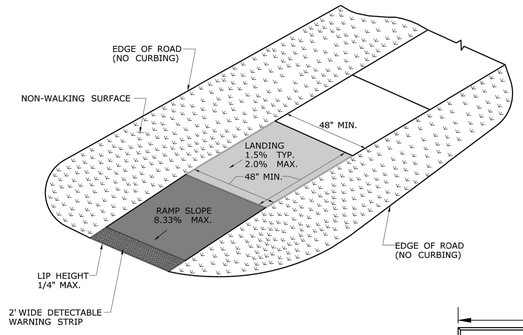

SINGLE DIRECTION - NO CURB WITH NON-WALKING SURFACE (TYPE 17)

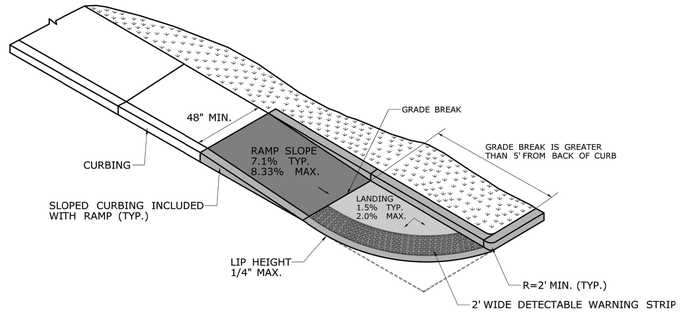

SINGLE DIRECTION RAMP WITHOUT NON-WALKING SURFACE GRADE BREAK GREATER THAN 5' (TYPE 14)

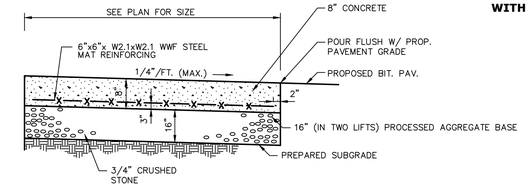

SECTION VIEW

CONCRETE DUMPSTER PAD AND CONCRETE PAVEMENT

N.T.S. BLPC–002

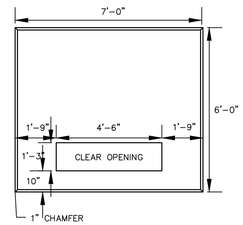

PLAN VIEW

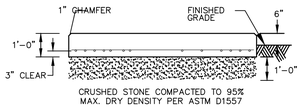

SECTION

CONFIRM SIZE WITH ELECTRIC COMPANY PRIOR TO CONSTRUCTION

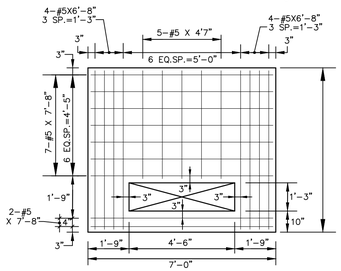

PLAN OF REINFORCING

TRANSFORMER PAD

N.T.S. BLLE–001

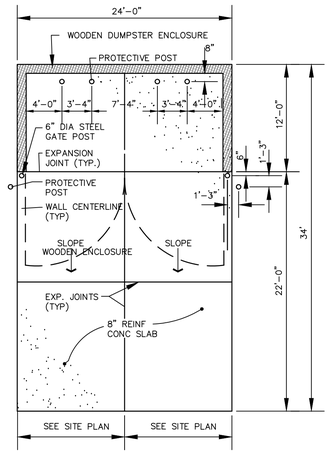

TRASH ENCLOSURE PLAN

N.T.S. BLSE–004

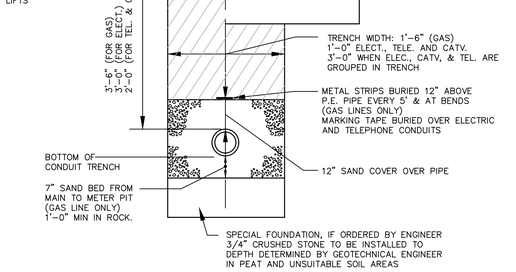

ELECTRICAL AND TELEPHONE TRENCH DETAIL

N.T.S. BLUD–001

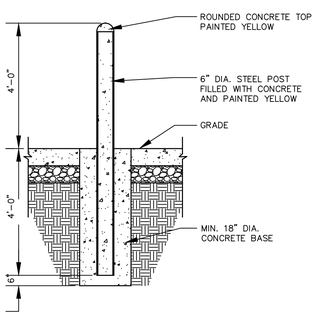

PROTECTIVE POST (BOLLARD) DETAIL

N.T.S. BLSE–005

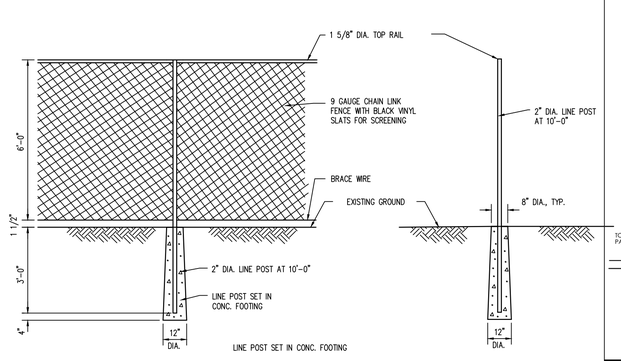

FRONT VIEW SIDE VIEW

LINE POST SET IN CONC. FOOTING

CHAIN LINK FENCE DETAIL

N.T.S. BLFD–001

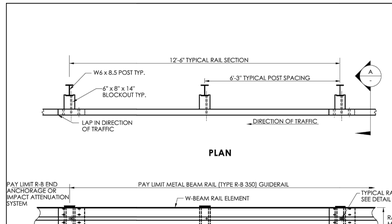

PLAN

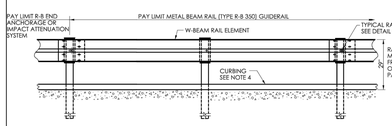

ELEVATION

METAL BEAM RAIL (TYPE R-B 350)

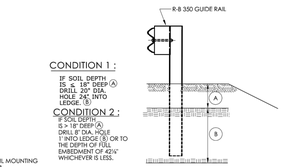

ELEVATION
(SEE NOTE B)

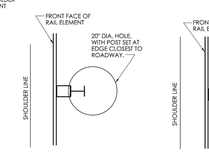

PLAN
CONDITION 1
(SEE NOTE B)

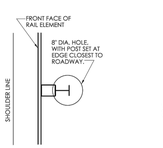

PLAN
CONDITION 2
(SEE NOTE B)

DRILLING IN ROCK FOR GUIDERAIL POSTS

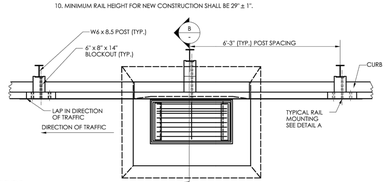

PLAN

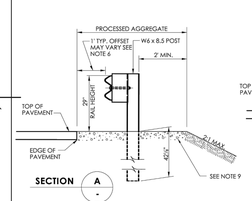

SECTION A

NO CURB APPLICATION

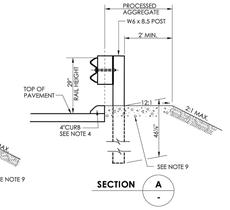

SECTION A

CURB APPLICATION

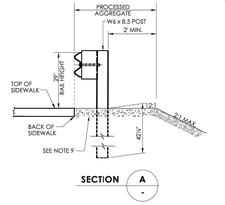

SECTION A

SIDEWALK APPLICATION

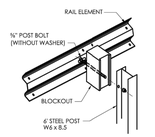

DETAIL A
RAIL MOUNTING

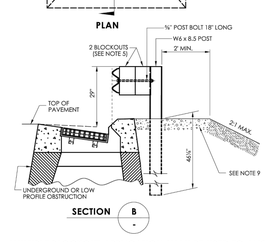

SECTION B

MULTIPLE BLOCKOUT APPLICATION (MAY BE USED TO AVOID UNDERGROUND OR LOW PROFILE OBSTRUCTION)

GENERAL NOTES:

1. SEE SHEET HW-910_01 FOR HARDWARE AND DELINEATOR DETAILS.
2. MAXIMUM DESIGN DEFLECTION FOR R-B 350 GUIDERAIL AT THE STANDARD POST SPACING OF 6'-3" IS 4'-3". DEFLECTION REQUIREMENT IS MEASURED FROM THE BACK OF POST TO THE FACE OF OBJECT.
3. FOR CURVES WITH RADII OF 150' OR LESS, ALL RAIL ELEMENTS SHALL BE SHOP FABRICATED TO THE PROPER RADIUS AND GALVANIZED AFTER FABRICATION. RADIUS RAIL WHEN REQUIRED AND NOTED ON THE PLANS, IS INCLUDED IN THE PAY ITEM FOR GUIDERAIL.
4. RAIL HEIGHT WITH CURBING SHALL BE MEASURED FROM THE TOP OF PAVEMENT, ON HIGH SPEED ROADWAYS (>45mph), 4" CURBING MAY BE USED IN CONJUNCTION WITH GUIDERAIL AND THE RAIL ELEMENT SHALL BE PLACED FLUSH WITH THE FACE OF CURB, ON LOW SPEED ROADWAYS (≤45mph) , 4" CURBING MAY BE USED IN CONJUNCTION WITH GUIDERAIL AND THE RAIL ELEMENT SHALL BE PLACED A MAXIMUM OF 9" BEHIND THE FACE OF CURB.
5. THREE BLOCKOUTS MAY BE USED FOR ONE POST ONLY. TWO BLOCKOUTS MAY BE USED FOR A SERIES OF POSTS. THE COST OF ADDITIONAL BLOCKOUTS AND LONGER BOLTS SHALL BE INCLUDED IN THE BID PRICE PER FOOT OF GUIDERAIL. EXTRA BLOCKOUTS AT TRANSITION TO BRIDGE PARAPETS SHOULD BE AVOIDED.
6. W-BEAM GUIDERAIL MAY BE PLACED 1' OR MORE FROM THE EDGE OF PAVEMENT ONLY ON SLOPES 10:1 OR FLATTER AND WITHOUT CURBING. IF THE RAIL IS INSTALLED WITHIN 2' OF THE EDGE OF PAVEMENT, THE RAIL HEIGHT IS MEASURED FROM THE SHOULDER SLOPE EXTENDED TO THE RAIL. IF THE RAIL IS INSTALLED BEYOND 2' FROM THE EDGE OF PAVEMENT, THE RAIL HEIGHT IS MEASURED FROM THE GROUND DIRECTLY BELOW THE RAIL.
7. ALL R-B 350 GUIDERAIL TYPES INSTALLED ON EXPRESSWAYS AND RAMPS SHALL USE CLASS B, TYPE-II (10-GAUGE) W-BEAM RAIL ELEMENTS.
8. 20" DIA. EXCAVATED HOLE SHALL BE BACKFILLED WITH SUITABLE MATERIAL, OR GRANULAR FILL COMPACTED IN 6" LIFTS BEFORE DRIVING POST OR POSTS MAY BE SET IN EXCAVATED HOLE AND BACKFILLED WITH CONTROLLED LOW STRENGTH MATERIAL (CLSM). 8" DIA. HOLE SHALL BE BACKFILLED WITH SUITABLE MATERIAL.
9. AS DIRECTED BY THE ENGINEER AND WHERE PAVEMENT FOR RAILING IS NOT BEING INSTALLED, A MIN. 6" DEPTH OF PROCESSED AGGREGATE SHALL BE INSTALLED FROM THE PAVEMENT EDGE OR BACK OF CURB TO A MINIMUM OF 2' BEHIND THE GUIDERAIL POST AND COMPACTED IN 6" LIFTS.
10. MINIMUM RAIL HEIGHT FOR NEW CONSTRUCTION SHALL BE 29" ± 1".

NOT TO SCALE	SIGNATURE BLOCK: OFFICE OF ENGINEERING 2800 BERLIN TURNPIKE NEWINGTON, CT 06111	SUBMITTED BY: Digitally signed by Jeffrey A. Reed Date: 2024.12.16 14:18:50-05'00'	APPROVED BY: Digitally signed by Michael N. Calabrese, P.E. Date: 2024.12.23 13:45:55-05'00'	CTDOT CONNECTICUT DEPARTMENT OF TRANSPORTATION	CTDOT STANDARD SHEET	STANDARD SHEET TITLE: METAL BEAM RAIL (TYPE R-B 350) GUIDERAIL	STANDARD SHEET NO.: HW-910_02

FOR PERMITTING PURPOSES ONLY
NOT RELEASED FOR CONSTRUCTION

© 2025 BL COMPANIES, INC. THESE DRAWINGS SHALL NOT BE UTILIZED BY ANY PERSON, FIRM OR CORPORATION WITHOUT THE SPECIFIC WRITTEN PERMISSION OF BL COMPANIES.

Architecture
Engineering
Environmental
Land Surveying
BL Companies
100 Constitution Plaza
10th Floor
Hartford, CT 06103
(860) 249-2200

STATE OF CONNECTICUT
TIMOTHY A. VOLZ
31117
LICENSED
PROFESSIONAL ENGINEER

PROPOSED MANUFACTURING / INDUSTRIAL DEVELOPMENT

50-58 RAINBOW ROAD
EAST GRANBY, CONNECTICUT 06026

REVISIONS No.	Date	Desc.

Designed	M.A.G.
Drawn	M.A.G.
Reviewed	
Scale	NONE
Project No.	2300888
Date	06/03/2025
CAD File:	DN230088801

Title

DETAILS

Sheet No.

DN-2

Xref (s) : \B2300888801

\\BLFILES\ PW\ATHREE G\ \CIVIL\23\2300888\ DWG\ DN230088801 DWG DN-2 M.DWG

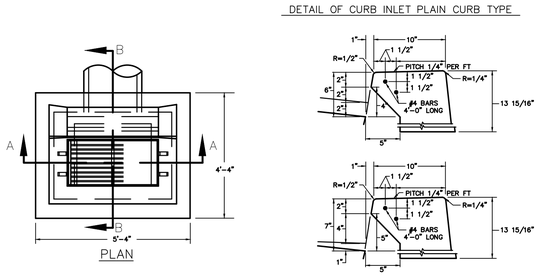

TYPE "C" CATCH BASIN WITH HOOD

N.T.S. ZDD–027

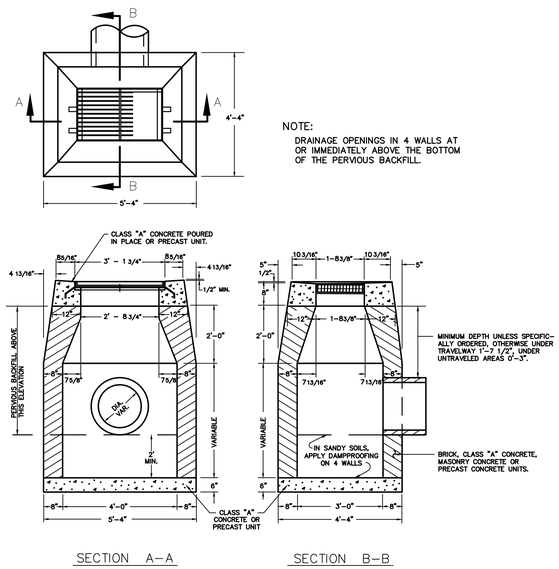

TYPE "C-L" CATCH BASIN

N.T.S. ZDD–028

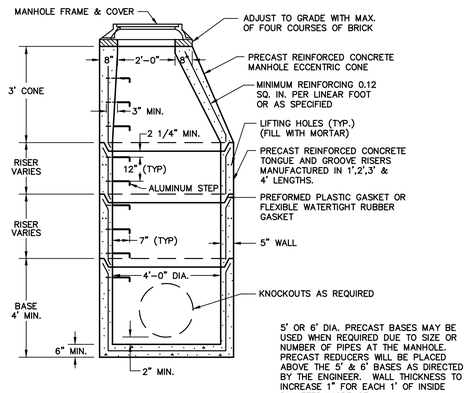

PRECAST STORM MANHOLE DETAIL

N.T.S. ZDD–049

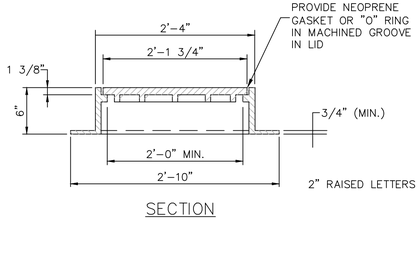

STANDARD MANHOLE FRAME AND COVER

N.T.S. RA_C202_J6

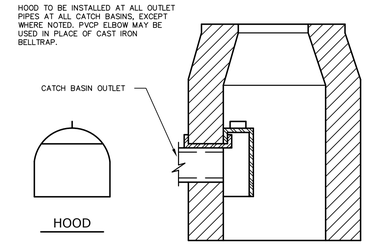

HOODED OUTLET

N.T.S. CTDD–004

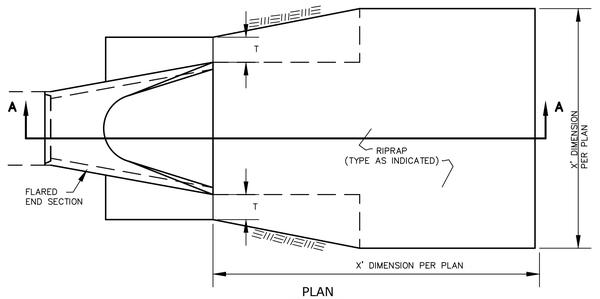

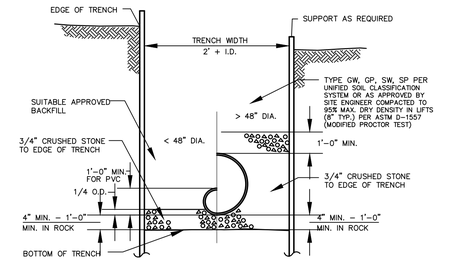

TYPICAL STORM SEWER TRENCH SECTION

N.T.S. BLDD–004

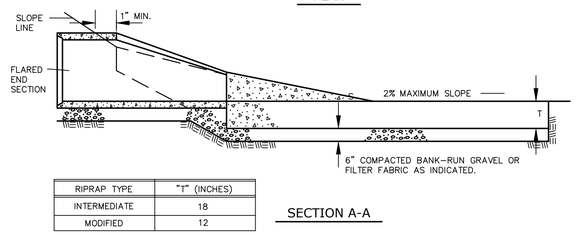

RIPRAP TYPE	"T" (INCHES)
INTERMEDIATE	18
MODIFIED	12

RIPRAP AT FLARED SECTION

N.T.S. CTDD–010

GENERAL NOTES

1. STRIP ALL VEGETATION AND ORGANIC SOIL FROM THE WALL AND GRID ALIGNMENT.
2. BENCH CUT ALL EXCAVATED SLOPES.
3. DO NOT OVER EXCAVATE UNLESS DIRECTED BY SITE SOIL ENGINEER TO REMOVE UNSUITABLE SOIL.
4. SITE SOIL ENGINEER SHALL VERIFY FOUNDATION SOILS AS BEING COMPETENT PER THE DESIGN STANDARDS AND PARAMETERS.
5. LEVELING PAD SHALL CONSIST OF 3/4" CRUSHED STONE, MINIMUM 6" THICK OR MINIMUM 2000 PSI CONCRETE.
6. MINIMUM EMBEDMENT OF WALL BELOW FINISH GRADE SHALL BE 24".
7. FOLLOW APPLICABLE PROVISIONS OF THE MANUFACTURERS INSTALLATION INSTRUCTIONS AND WRITTEN SPECIFICATIONS.
8. WHERE DRAIN PIPE IS USED, PROVIDE OUTLETS AS SHOWN ON WALL ELEVATIONS.
9. COMPACTION TESTS SHALL BE TAKEN AS THE WALL IS INSTALLED. THE MINIMUM NUMBER OF TESTS SHALL BE DETERMINED BY THE SITE SOILS ENGINEER, OR AS INDICATED IN THE SPECIFICATION.
10. COMPACTION SHALL BE 95% OF MAXIMUM DRY DENSITY PER AASHTO T–99.
11. GEOGRID SHALL BE PER BLOCK MANUFACTURER'S DESIGN ON SHOP DRAWINGS.
12. PULL GEOGRID TIGHT PRIOR TO BACK FILLING. LENGTH OF GEOGRID SHALL BE MEASURED FROM FRONT OF SEGMENTAL CONCRETE UNITS.
13. PROVIDE LATERAL DRAINAGE SWALES TO DIRECT FLOWS AROUND THE ENDS OF THE WALL.
14. ESTABLISH TURF AS SOON AS THE WALL IS COMPLETED.
15. FINAL WALL ALIGNMENT SHALL BE LOCATED IN THE FIELD.
16. REINFORCED BACK FILL REQUIREMENTS FOR THE SEGMENTAL CONCRETE RETAINING WALL SHALL CONFORM TO THE FOLLOWING SPECIFICATIONS:

SIEVE SIZE	PERCENT PASSING REINFORCED BACK FILL
5 INCH	100
3–1/2 INCH	90–100
1–1/2 INCH	55–95
1/4 INCH	25–60
NO. 10	15–45
NO. 40	5–25
NO. 100	0–10
NO. 200	0–5

PLASTICITY INDEX (PI) LESS THAN OR EQUAL TO 10 AND A LIQUID LIMIT LESS THAN OR EQUAL TO 40. REINFORCED BACK FILL SHALL BE PLACED AND COMPACTED IN LIFTS NOT EXCEEDING 10 INCHES. REINFORCED BACK FILL SHALL BE COMPACTED TO 95 PERCENT OF THE MAXIMUM DENSITY AS DETERMINED BY AASHTO T–99. THE MOISTURE CONTENT OF THE BACK FILL MATERIAL PRIOR TO AND DURING COMPACTION SHALL BE WITHIN 2 PERCENTAGE POINTS OF DRY OPTIMUM.

IF CONDITIONS ARE DIFFERENT THAN THOSE STATED IN THESE DRAWINGS AND SPECIFICATIONS, THE CONTRACTOR MUST CONTACT THE ENGINEER PRIOR TO PROCEEDING WITH THE CONSTRUCTION OF THE WALL.

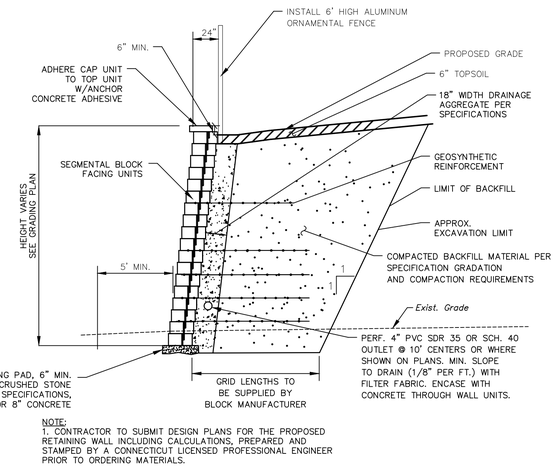

NOTE:
1. CONTRACTOR TO SUBMIT DESIGN PLANS FOR THE PROPOSED RETAINING WALL INCLUDING CALCULATIONS, PREPARED AND STAMPED BY A CONNECTICUT LICENSED PROFESSIONAL ENGINEER PRIOR TO ORDERING MATERIALS.

TYPICAL MODULAR BLOCK RETAINING WALL SECTION

N.T.S.

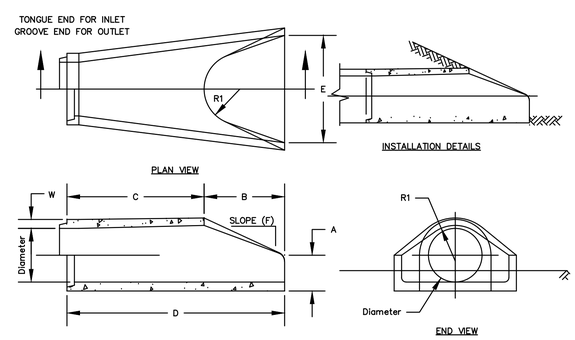

SECTION AT CENTERLINE (PROFILE VIEW)

Dimensions								
Diameter	A	B	C	D	E	F	R1	W
12"ø	4"	2'–0"	4'–0 7/8"	6'–0 7/8"	2'–0"	3 : 1	9"	2 9/16"
15"ø	6"	2'–3"	3'–10"	6'–1"	2'–6"	3 : 1	11"	2 11/16"
18"ø	9"	2'–3"	3'–10"	6'–1"	3'–0"	3 : 1	12"	2 13/16"
24"ø	10"	3'–8"	2'–8"	6'–2"	4'–0"	3 : 1	14"	5 21/32"
30"ø	12"	4'–6"	1'–8"	6'–2"	5'–0"	3 : 1	15"	4 17/32"
36"ø	15"	5'–3"	2'–11"	8'–2"	6'–0"	3 : 1	20"	4 17/32"
42"ø	21"	5'–3"	2'–11"	8'–2"	6'–6"	3 : 1	22"	4 13/32"

NOTES:
1. Produced to ASTM Specifications.
2. This drawing is not intended to show reinforcement design. Either as to placement or steel area. Actual project specifications or current ASTM will govern.
3. Consult Hydro Conduit Corp. local representative for further details not listed on this drawning.

TULSA PIPE
3200 North 129th East Avenue
Tulsa, Oklahoma 74116
P.O. Box 581524
Tulsa, Oklahoma 74158–1524
(918) 438–0230

CR 170
35
ISSUED 12/93

FLARED END SECTION DETAILS
(WITH PRECAST STD. BASE AND CUSTOMER SPECIFIED OPENINGS)
FLAT TOP ECCENTRIC (CONCENTRIC ALSO AVAILABLE)

N.T.S. ZDD–062

FOR PERMITTING PURPOSES ONLY
NOT RELEASED FOR CONSTRUCTION

© 2025 BL COMPANIES, INC. THESE DRAWINGS SHALL NOT BE UTILIZED BY ANY PERSON, FIRM OR CORPORATION WITHOUT THE SPECIFIC WRITTEN PERMISSION OF BL COMPANIES.

Architecture
Engineering
Environmental
Land Surveying
BL Companies
100 Constitution Plaza
10th Floor
Hartford, CT 06103
(860) 249-2200

STATE OF CONNECTICUT
TIMOTHY A. VOLEK
29197
LICENSED PROFESSIONAL ENGINEER

PROPOSED MANUFACTURING / INDUSTRIAL DEVELOPMENT

50-58 RAINBOW ROAD
EAST GRANBY, CONNECTICUT 06026

REVISIONS
No. Date Desc.

Designed	M.A.G
Drawn	M.A.G
Reviewed	
Scale	NONE
Project No.	2300888
Date	06/03/2025
CAD File:	DN230088801

Title
DETAILS

Sheet No.
DN-3

Xref (s) : B2300888011

K:\2023\23-PAINTREE CT\CIVIL\DWG\23-2300888\DWG\DN230088801.DWG DN-3 2:1

THE METROPOLITAN DISTRICT
SEWER STANDARD DETAILS

MDC

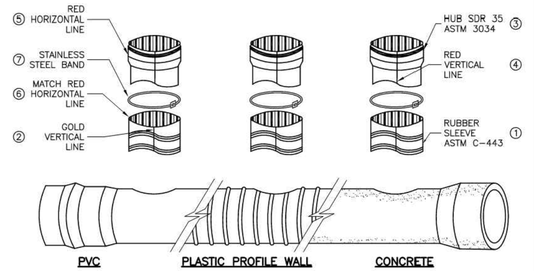

TEE SIZE	4"	6"	8"	10"	12"	15"
BIT SIZE	4–½"	6–½"	8–¾"	10–⅞"	12–⅞"	15–13⁄16"

INSTALLATION PROCEDURE:

① CORE THE PROPER SIZED HOLE.

② INSERT THE RUBBER SLEEVE IN THE CORED HOLE WITH THE GOLD VERTICAL LINE ON THE RUBBER SLEEVE FACING THE SIDE OF THE MAIN LINE. THE UPPER SEGMENT SHOULD BE ON TOP OF THE WALL/RIB AND THE LOWER SEGMENT SHOULD BE ON THE INSIDE OF THE PIPE (PLASTIC PIPE ONLY).

③ APPLY THE MANUFACTURER SPECIFIED TEE INSERT SOLUTION TO THE INSIDE OF THE RUBBER SLEEVE AND TO THE OUTSIDE OF THE PVC HUB ADAPTER. DO NOT USE AN OIL–BASED LUBRICANT.

④ PLACE THE PVC HUB ADAPTER INTO THE RUBBER SLEEVE. MAKE SURE THAT THE RED VERTICAL LINE ON THE PVC HUB ADAPTER IS IN LINE WITH THE GOLD VERTICAL LINE ON THE RUBBER SLEEVE.

⑤ PLACE A 2"x4" BOARD ONTO THE TOP OF THE PVC HUB ADAPTOR.

⑥ THE RED HORIZONTAL LINE AT THE TOP OF THE HUB ADAPTER IS A DEPTH MARK TO INDICATE HOW FAR TO DRIVE THE ADAPTER INTO THE RUBBER SLEEVE. DRIVE THE PVC HUB ADAPTER INTO THE RUBBER SLEEVE TO WHERE THE HORIZONTAL RED LINE ON THE PVC HUB ADAPTER MEETS THE TOP OF THE RUBBER SLEEVE.

⑦ PLACE THE STAINLESS STEEL BAND AROUND THE TOP OF THE RUBBER SLEEVE AND TIGHTEN DOWN. INSTALL PIPE IN NORMAL MANNER.

TEE INSERT CONNECTIONS

DETAIL S-14 | NTS

THE METROPOLITAN DISTRICT
SEWER STANDARD DETAILS

MDC

PIPE AND FITTINGS DESIGNATION	MINIMUM COVER
ASTM D3034 POLYVINYL CHLORIDE (PVC) (SDR–35) (TYPE PSM) 6" THROUGH 15"	3.5'
ASTM F679 PVC (LARGE DIAMETER) (TYPE PS–46) 18" THROUGH 27"	
ASTM F949 CORRUGATED PVC (SMOOTH INTERIOR) 6" THROUGH 36"	
ASTM F1803 CLOSED PROFILE PVC 30" THROUGH 48"	
ASTM F794 CLOSED PROFILE PVC (CONTROLLED I.D.) 30" THROUGH 48"	3.0'
ASTM F714, AWWA C906 HIGH DENSITY POLYETHYLENE (HDPE) (SOLID WALL)	
ASTM C76 REINFORCED CONCRETE PIPE (RCP) (CLASS IV) 12" AND LARGER	
ASTM C76 REINFORCED CONCRETE PIPE (RCP) (CLASS V) 12" AND LARGER	2.5'
ASTM A476, AWWA/ANSI DUCTILE IRON (DI) CLASS 52 8" THROUGH 24"	2.0'
ASTM D1794, AWWA C900 C900/C905 PVC (SDR–18) 6" THROUGH 12" (C900), 18" AND 24" (C905)	

NOTE:

1. THE CONTRACTOR SHALL LOCATE PIPELINES SUBSTANTIALLY AT THE DEPTHS SHOWN ON THE CONTRACT DRAWINGS. THE ENGINEER RESERVES THE RIGHT TO MAKE MODIFICATIONS TO THE PIPELINE LOCATIONS OR DEPTHS TO AVOID INTERFERENCE WITH EXISTING STRUCTURES, UTILITIES OR FOR ANY OTHER APPROVED REASONS.

MINIMUM DEPTH OF COVER OVER PIPE

DETAIL S-1 | NTS

THE METROPOLITAN DISTRICT
SEWER STANDARD DETAILS

MDC

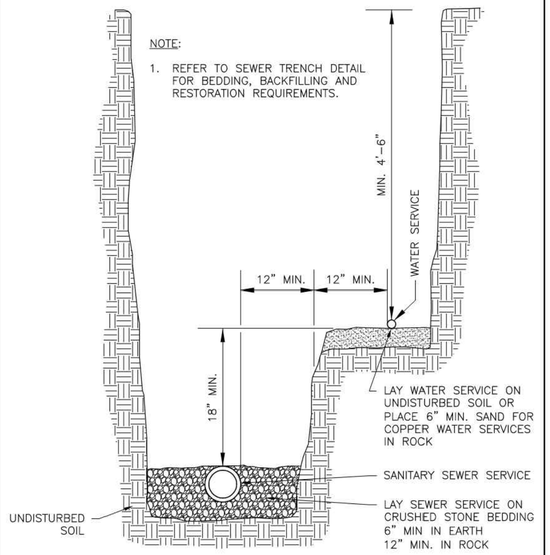

SEWER SERVICE AND WATER SERVICE IN COMMON TRENCH

DETAIL S-6 | NTS

THE METROPOLITAN DISTRICT
WATER STANDARD DETAILS

MDC

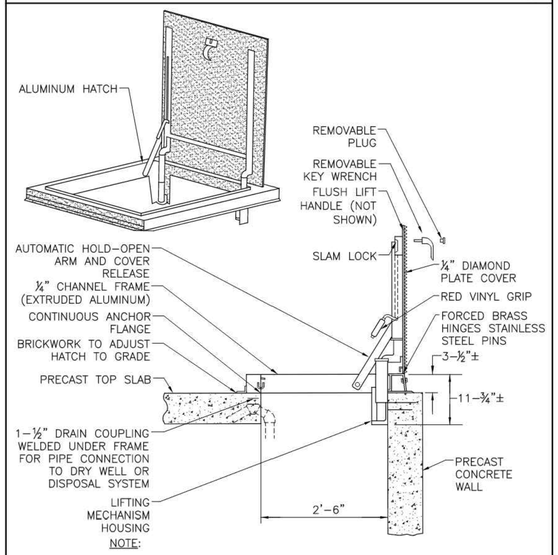

NOTE:

1. ALUMINUM HATCH SHALL BE 2'–6" x 2'–6" BILCO TYPE "J–ALH20" OR EQUAL.

ALUMINUM HATCH FOR PRECAST METER PITS

DETAIL W-35 | NTS

THE METROPOLITAN DISTRICT
SEWER STANDARD DETAILS

MDC

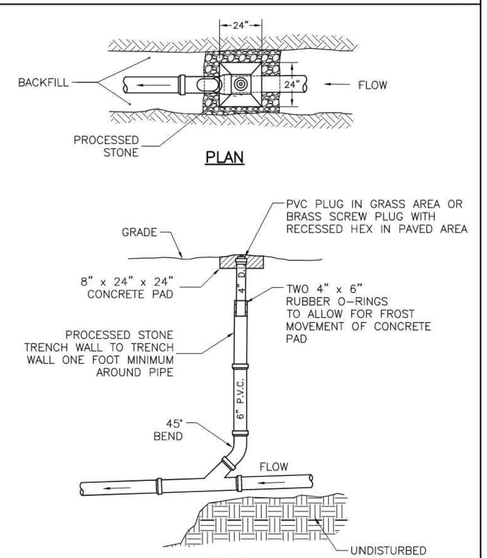

CLEANOUT AT GRADE

DETAIL S-17 | NTS

THE METROPOLITAN DISTRICT
SEWER STANDARD DETAILS

MDC

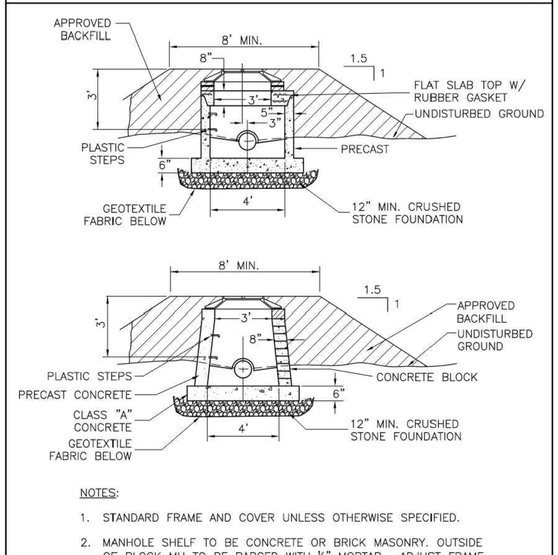

NOTES:

1. STANDARD FRAME AND COVER UNLESS OTHERWISE SPECIFIED.
2. MANHOLE SHELF TO BE CONCRETE OR BRICK MASONRY. OUTSIDE OF BLOCK MH TO BE PARGED WITH ½" MORTAR. ADJUST FRAME TO GRADE WITH BRICK (MIN. 2 COURSES, 18" MAX.).

TYPE V SHALLOW MANHOLE WITH OR WITHOUT EMBANKMENT

DETAIL S-20 | NTS

Architecture
Engineering
Environmental
Land Surveying

BL Companies

100 Constitution Plaza
10th Floor
Hartford, CT 06103
(860) 249-2200

STATE OF CONNECTICUT
TIMOTHY A. VOLL
31117
LICENSED
PROFESSIONAL ENGINEER

PROPOSED MANUFACTURING / INDUSTRIAL DEVELOPMENT
50-58 RAINBOW ROAD
EAST GRANBY, CONNECTICUT 06026

REVISIONS
No. Date Desc.

Designed M.A.G
Drawn M.A.G
Reviewed
Scale NONE
Project No. 2300888
Date 06/03/2025
CAD File: DN230088801

Title
DETAILS

Sheet No.
DN-4

Xref (s) : B2300888801

© 2025 BL COMPANIES, INC. THESE DRAWINGS SHALL NOT BE UTILIZED BY ANY PERSON, FIRM OR CORPORATION WITHOUT THE SPECIFIC WRITTEN PERMISSION OF BL COMPANIES.

THE METROPOLITAN DISTRICT
SEWER STANDARD DETAILS

MDC

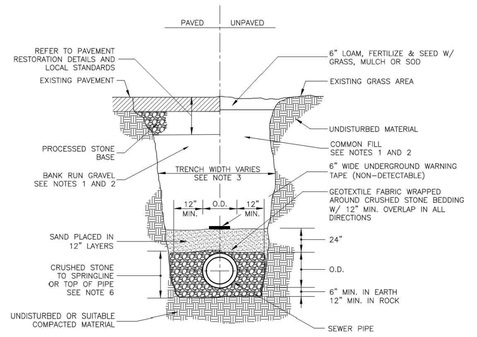

NOTES:

1. ALL EXCAVATED MATERIAL SHALL BE REMOVED FROM THE SITE AND DISPOSED.
2. BACKFILL MATERIAL SHALL BE APPROVED BANK RUN GRAVEL IN PAVED AREAS (INCLUDING DRIVEWAYS AND SIDEWALKS) OR COMMON FILL IN UNPAVED AREAS.
3. TRENCH WIDTH VARIES BASED ON PIPE SIZE AND DEPTH.
4. TRENCHES LOCATED IN THE ROAD SHOULDER SHALL BE TREATED THE SAME AS TRENCHES IN THE PAVED ROADWAY EXCEPT FOR PAVEMENT AND SURFACE RESTORATION WORK.
5. PROVIDE IMPERVIOUS TRENCH DAM(S) IN STONE BEDDING AS DIRECTED BY THE ENGINEER. SEE PIPE TRENCH DAM DETAIL.
6. CRUSHED STONE SHALL BE INSTALLED TO TOP OF PIPE FOR PVC AND DI PIPE AND TO SPRINGLINE FOR RC PIPE.

IF WET BOTTOM IS ENCOUNTERED, AN ADDITIONAL SIX (6) INCHES OF CRUSHED STONE SHALL BE PLACED UNDER THE STRUCTURE

SEWER TRENCH
DETAIL S 2
NTS

THE METROPOLITAN DISTRICT
SEWER STANDARD DETAILS

MDC

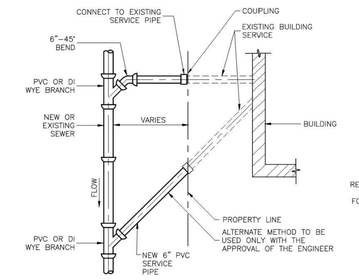

SEWER SERVICE REPLACEMENT
DETAIL S 9
NTS

THE METROPOLITAN DISTRICT
SEWER STANDARD DETAILS

MDC

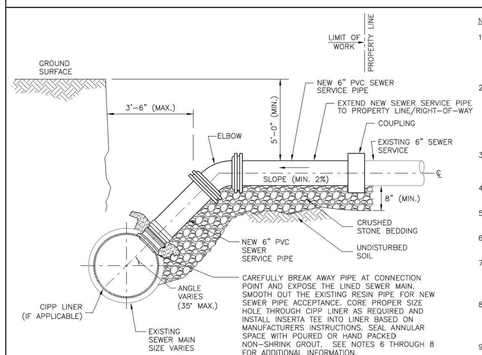

NOTES:

1. THIS DETAIL SHALL APPLY TO EXISTING OR NEW SERVICE LATERALS THAT WILL BE CONNECTED TO A CIPP LINED SEWER MAIN AT THE EXISTING WYE OR AT A RELOCATED LOCATION AS SHOWN ON THE DRAWINGS. MAINLINE SEWER CIPP LINING WORK SHALL BE COMPLETED PRIOR TO SERVICE LATERAL REPLACEMENT.
2. CONNECTIONS FOR SERVICES THAT ARE SCHEDULED FOR RELOCATION SHALL BE MADE AT A 5' MIN. DISTANCE AWAY FROM THE EXISTING SERVICE CONNECTION. THE EXISTING SERVICE PIPE THAT REMAINS SHALL BE FILLED AND ABANDONED USING GROUT, SAND OR FLOWABLE FILL, OR ABANDONED IN PLACE AS DIRECTED BY THE ENGINEER. THE EXISTING CONNECTION TO THE MAIN SHALL BE PLUGGED, SEALED AND ABANDONED AS REQUIRED.
3. CONNECT NEW PVC SERVICE LATERAL PIPE DIRECTLY TO THE EXISTING SERVICE LATERAL PIPE AT THE PROPERTY LINE AS SHOWN ON THE PLANS.
4. WHEN BREAKING AWAY EXISTING PIPE, DO NOT ALLOW DEBRIS TO ENTER SEWER.
5. REFER TO SEWER TRENCH DETAIL FOR BACKFILLING AND RESTORATION REQUIREMENTS.
6. CONTRACTOR TO PROVIDE ALL FITTINGS FOR NEW SERVICE CONNECTIONS AS REQUIRED.
7. FOR CURED-IN-PLACE LINER, VERIFY THAT THE LINER IS COMPLETELY CURED AND ALLOW THE LINER TO NORMALIZE TO AMBIENT TEMPERATURE AND RECOVER FROM IMPOSED STRETCH PRIOR TO NEW SERVICE LATERAL CONNECTION WORK.
8. IMMEDIATELY FOLLOWING LINER INSTALLATION AND CURING, THE CONTRACTOR SHALL CUT A RELIEF HOLE AT EACH SERVICE LATERAL. THE RELIEF HOLE SHALL BE CUT AS REQUIRED TO ALLOW FOR A 6-INCH INSERTA TEE PER MANUFACTURER'S RECOMMENDATIONS.
9. THE CONTRACTOR SHALL PROVIDE SUFFICIENT WORKING SPACE TO INSTALL A 6-INCH INSERTA TEE PER MANUFACTURER'S RECOMMENDATIONS.
10. NOT TO BE USED FOR HOUSE CONNECTION PERMIT WORK.

SERVICE LATERAL INSERTA TEE CONNECTION
DETAIL S 10
NTS

THE METROPOLITAN DISTRICT
SEWER STANDARD DETAILS

MDC

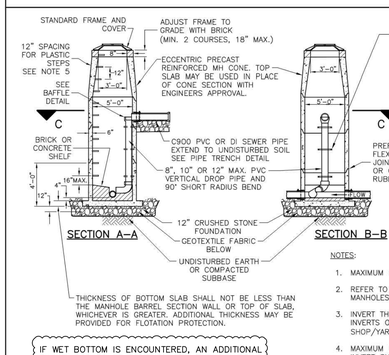

IF WET BOTTOM IS ENCOUNTERED, AN ADDITIONAL SIX (6) INCHES OF CRUSHED STONE SHALL BE PLACED UNDER THE STRUCTURE

NOTES:

1. MAXIMUM PIPE SIZE TO BE INSTALLED IN 60" PRECAST MANHOLE BASE SHALL BE 24".
2. REFER TO SEWER TRENCH DETAIL FOR BACKFILLING AND COMPACTION REQUIREMENTS AROUND SEWER MANHOLES.
3. INVERT THROUGH THE MANHOLE SHALL HAVE A UNIFORM GRADE OF MINIMUM 0.10 FEET BETWEEN THE INVERTS OF THE INLET AND OUTLET PIPES. INVERTS SHALL BE FIELD FORMED AND NOT FORMED IN SHOP/YARD.
4. MAXIMUM DIFFERENCE IN ELEVATION BETWEEN THE INVERT OF THE TRIBUTARY INLET AND THE MANHOLE INVERT SHALL BE 18 INCHES. ELEVATION DIFFERENCES GREATER THAN 18 INCHES WILL REQUIRE A DROP CONNECTION.
5. DISTANCE FROM TOP OF MANHOLE COVER TO FIRST PLASTIC STEP SHALL BE BETWEEN 12" AND 16".

TYPE IV PRECAST CONCRETE DROP MANHOLE
DETAIL S 19
NTS

JOINT METHOD NOTES:

① MECHANICAL JOINT RETAINER GLANDS

② PUSH-ON JOINT RESTRAINT USING MECHANICAL JOINT RETAINER GLANDS

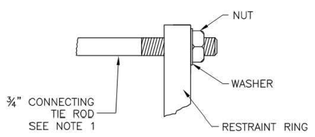

DETAIL

NOTE:

1. PROVIDE 12" MIN. LENGTH TIE RODS W/ NUTS AND WASHERS. TYPICAL TIE ROD LENGTH IS 24".

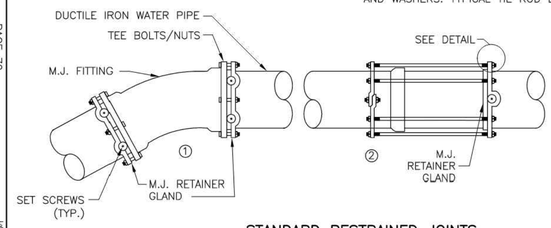

STANDARD RESTRAINED JOINTS
DETAIL W 24
NTS

THE METROPOLITAN DISTRICT
WATER STANDARD DETAILS

MDC

THE METROPOLITAN DISTRICT
SEWER STANDARD DETAILS

MDC

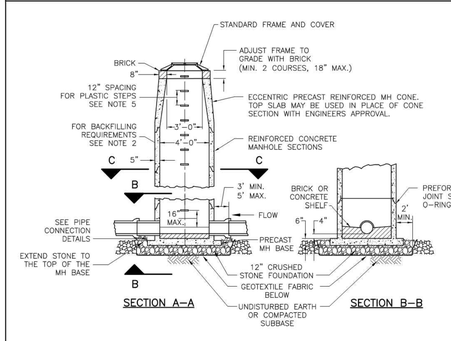

IF WET BOTTOM IS ENCOUNTERED, AN ADDITIONAL SIX (6) INCHES OF CRUSHED STONE SHALL BE PLACED UNDER THE STRUCTURE

NOTES:

1. MAXIMUM PIPE SIZE TO BE INSTALLED IN 48" MANHOLE BASE SHALL BE 18".
2. REFER TO SEWER TRENCH DETAIL FOR BACKFILLING AND COMPACTION REQUIREMENTS AROUND SEWER MANHOLES.
3. INVERT THROUGH THE MANHOLE SHALL HAVE A UNIFORM GRADE OF MINIMUM 0.10 FEET BETWEEN THE INVERTS OF THE INLET AND OUTLET PIPES. INVERTS SHALL BE FIELD FORMED AND NOT FORMED IN SHOP/YARD.
4. MAXIMUM DIFFERENCE IN ELEVATION BETWEEN THE INVERT OF THE TRIBUTARY INLET AND THE MANHOLE INVERT SHALL BE 18 INCHES. ELEVATION DIFFERENCES GREATER THAN 18 INCHES WILL REQUIRE A DROP CONNECTION.
5. DISTANCE FROM TOP OF MANHOLE COVER TO FIRST PLASTIC STEP SHALL BE BETWEEN 12" AND 16".

TYPE II PRECAST CONCRETE MANHOLE
DETAIL S 18
NTS

Architecture
Engineering
Environmental
Land Surveying

BL Companies

100 Constitution Plaza
10th Floor
Hartford, CT 06103
(860) 249-2200

STATE OF CONNECTION
TIMOTHY A. VOLL
29117
LICENSED PROFESSIONAL ENGINEER

PROPOSED MANUFACTURING / INDUSTRIAL DEVELOPMENT

50-58 RAINBOW ROAD
EAST GRANBY, CONNECTICUT 06026

REVISIONS

No.	Date	Desc.

Designed	M.A.G
Drawn	M.A.G
Reviewed	
Scale	NONE
Project No.	2300888
Date	06/03/2025
CAD File: DN230088801	

Title

DETAILS

Sheet No.

DN-5

2/7/2025, TWAITNEY, G:\CIVIL\23\DN\230088801\DWG\DN230088801.DWG DN-5 24X36.
© 2025 BL COMPANIES, INC. THESE DRAWINGS SHALL NOT BE UTILIZED BY ANY PERSON, FIRM OR CORPORATION WITHOUT THE SPECIFIC WRITTEN PERMISSION OF BL COMPANIES.

Xref (s) : BD230088801

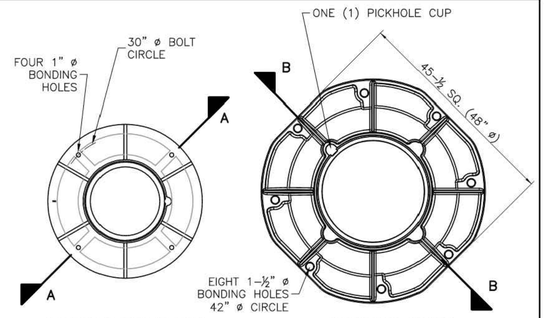

STANDARD FRAME FOR EXISTING MANHOLES

STANDARD FRAME FOR NEW MANHOLES

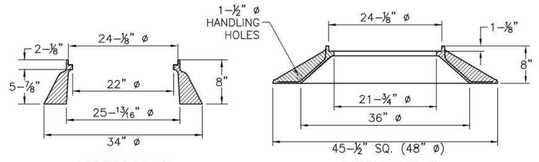

SECTION A–A

SECTION B–B

STANDARD MANHOLE FRAMES

DETAIL S
NTS 26

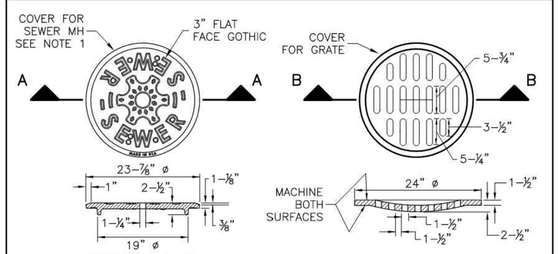

SECTION A–A (PLATEN COVER)

SECTION B–B

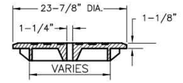

SECTION A–A (RIBBED COVER)

NOTES:

1. MANHOLES COVERS MAY BE DESIGN WITH OR WITHOUT RIBS. THE TOP SURFACE OF THE MANHOLE COVER SHALL BE FLAT. THE BOTTOM SURFACE MAY OR MAY NOT BE FLAT.
2. PROVIDE ALTERNATIVE INSCRIPTION 'STORM DRAIN' WHEN SPECIFIED.
3. THE LOWER SURFACE OF THE COVER AND THE CORRESPONDING UPPER SURFACE OF THE FRAME SHALL BE MACHINE FINISHED TO PROVIDE A SMOOTH FLAT CONTACT OR FIT WITHOUT ANY TENDENCY FOR THE COVER OR GRATE TO ROCK OR RATTLE. THE GAP BETWEEN THE COVER/GRATE AND FRAME SHALL BE NO MORE THAN ⅛" ALL AROUND.

STANDARD MANHOLE COVERS

DETAIL S
NTS 27

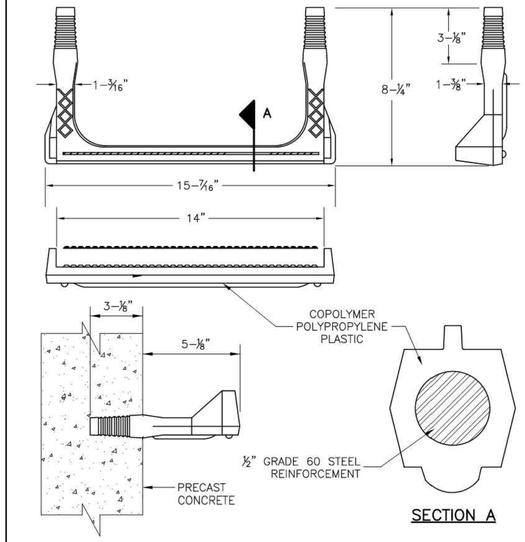

SECTION A

PLASTIC STEP FOR PRECAST CONCRETE MANHOLE

DETAIL S
NTS 34

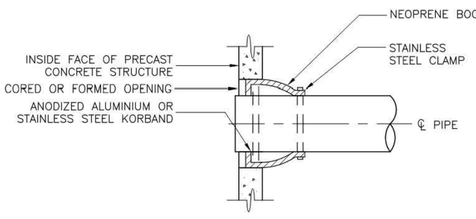

KOR–N–SEAL BOOT

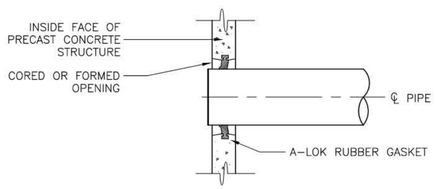

A–LOK SYSTEM

NOTE:

1. PACK NON–SHRINK GROUT AROUND ANNULAR AREA OF PIPE ON OUTSIDE OF STRUCTURE PRIOR TO BACKFILLING.

PIPE CONNECTIONS TO PRECAST CONCRETE STRUCTURES

DETAIL S
NTS 38

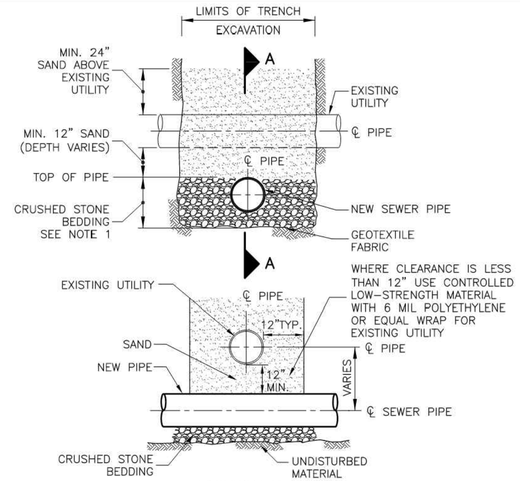

SECTION A–A

NOTES:

1. CRUSHED STONE SHALL BE INSTALLED TO TOP OF PIPE FOR PVC AND DI PIPE AND TO SPRINGLINE FOR RC PIPE.
2. REFER TO SEWER TRENCH DETAIL FOR BACKFILLING AND RESTORATION REQUIREMENTS.

EXISTING GAS OR WATER UTILITY CROSSING

DETAIL S
NTS 42

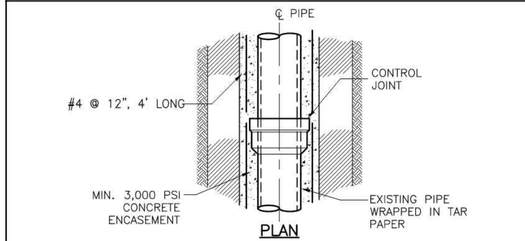

PLAN

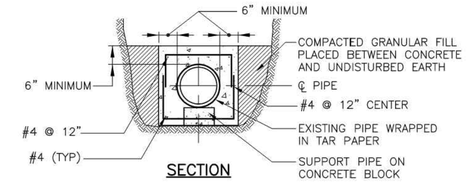

SECTION

NOTES:

1. CONTROL JOINTS AND PIPE JOINTS FOR ARCHES, AND ENCASEMENT SHALL COINCIDE FOR SPACING. MAXIMUM DISTANCE BETWEEN CONTROL JOINTS SHALL BE 24'±.
2. REINFORCING STEEL TO BE USED ONLY WHEN DEPTH OF COVER TO TOP OF SURFACE OF CONCRETE IS 5'–0" OR LESS.
3. REFER TO SEWER TRENCH DETAIL FOR BACKFILLING AND BEDDING REQUIREMENTS.
4. LIMITS OF CONCRETE ENCASEMENT SHALL BE SHOWN ON CONTRACT DRAWINGS OR AS DIRECTED BY ENGINEER.

CONCRETE ENCASEMENT

DETAIL S
NTS 44

Architecture
Engineering
Environmental
Land Surveying
BL Companies
100 Constitution Plaza
10th Floor
Hartford, CT 06103
(860) 249-2200

STATE OF CONNECTION
TIMOTHY A. VOLK
38117
LICENSED
PROFESSIONAL ENGINEER

PROPOSED MANUFACTURING / INDUSTRIAL DEVELOPMENT
50-58 RAINBOW ROAD
EAST GRANBY, CONNECTICUT 06026

REVISIONS
No. Date Desc.

Designed M.A.G
Drawn M.A.G
Reviewed
Scale NONE
Project No. 2300888
Date 06/03/2025
CAD File: DN230088801

Title
DETAILS

Sheet No.
DN-6

Xref (s) : BD230088801

© 2025 BL COMPANIES, INC. THESE DRAWINGS SHALL NOT BE UTILIZED BY ANY PERSON, FIRM OR CORPORATION WITHOUT THE SPECIFIC WRITTEN PERMISSION OF BL COMPANIES.

THE METROPOLITAN DISTRICT
WATER STANDARD DETAILS

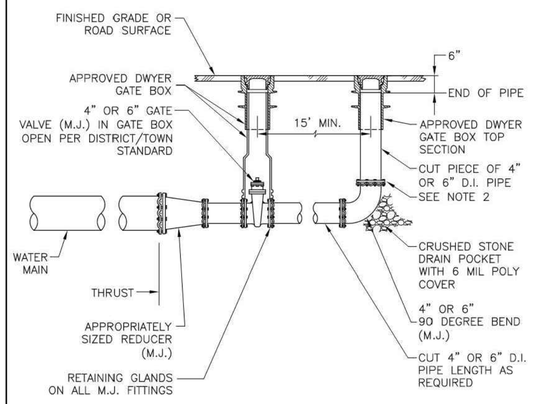

NOTE:

1. TO BE USED AT END OF MAIN ONLY WHEN THERE IS NO PROBABILITY OF FUTURE MAIN EXTENSION.
2. CUT AND REMOVE ½" OR ¾" SECTION OF GASKET SO WATER WILL DRAIN FROM STANDPIPE

4-INCH OR 6-INCH BLOW-OFF ASSEMBLY (END OF MAIN)

DETAIL W 42
NTS

File: W-42 4-inch Blow-off Assembly (End of Main).dwg

Latest Revision: JANUARY 2017

THE METROPOLITAN DISTRICT
WATER STANDARD DETAILS

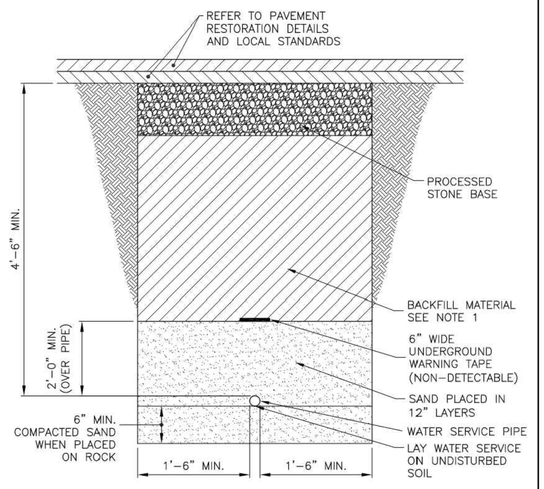

NOTE:

1. BACKFILL MATERIAL SHALL BE BANK-RUN GRAVEL IN PAVED AREAS (INCLUDING SIDEWALKS AND DRIVEWAYS) OR COMMON FILL IN NON-PAVED AREAS.

WATER SERVICE TRENCH

DETAIL W 4
NTS

File: W-4 Water Service Trench.dwg

Latest Revision: JANUARY 2017

THE METROPOLITAN DISTRICT
WATER STANDARD DETAILS

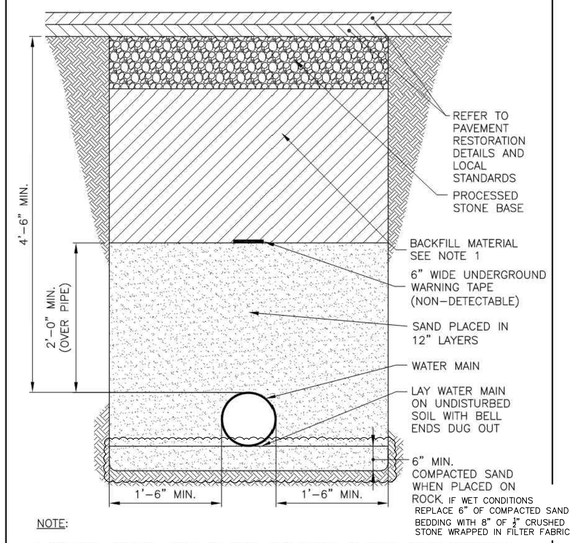

NOTE:

1. BACKFILL MATERIAL SHALL BE BANK-RUN GRAVEL IN PAVED AREAS (INCLUDING SIDEWALKS AND DRIVEWAYS) OR COMMON FILL IN NON-PAVED AREAS.

WATER MAIN TRENCH

DETAIL W 3
NTS

File: W-3 Water Main Trench.dwg

Latest Revision: JANUARY 2017

THE METROPOLITAN DISTRICT
WATER STANDARD DETAILS

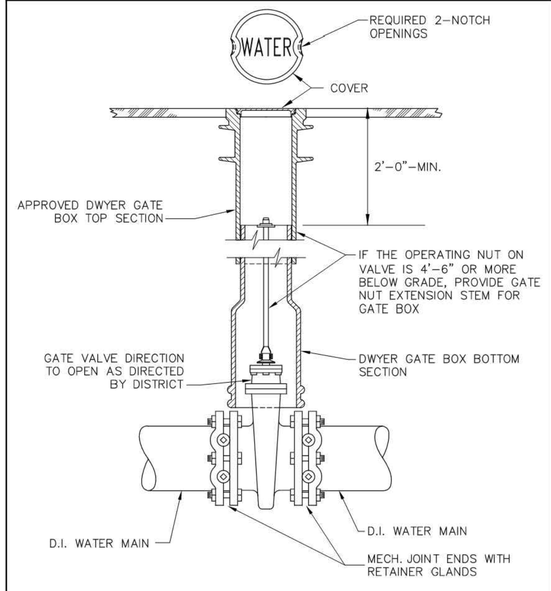

STANDARD GATE VALVE 12-INCH AND SMALLER

DETAIL W 12
NTS

File: W-12 Standard Gate Valve 12-inch and Smaller.dwg

Latest Revision: JANUARY 2017

THE METROPOLITAN DISTRICT
WATER STANDARD DETAILS

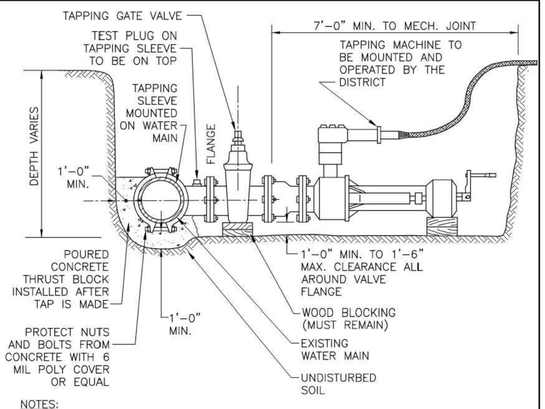

NOTES:

1. TAPPING SLEEVE & TAPPING GATE VALVE TO BE INSTALLED ON WATER MAIN BY THE CONTRACTOR. THE DISTRICT WILL TEST INSTALLATION PRIOR TO MAKING TAP. NO TAP WILL BE MADE IF THERE IS NO TEST PLUG.
2. TAPPING GATE VALVE TO HAVE HAND OF OPERATION AS DIRECTED BY THE DISTRICT. IF VALVE HAND OF OPERATION IS NOT CORRECT, NO TAP WILL BE MADE.
3. CONTRACTOR SHALL COORDINATE WITH THE DISTRICT AND THE PROPERTY OWNER PRIOR TO TRENCH EXCAVATION. THE TRENCH SHALL BE PROPERLY DEWATERED, SUPPORTED AND SHALL COMPLY WITH OSHA REQUIREMENTS FOR TRENCH EXCAVATION.

TRENCH REQUIREMENTS FOR
4-INCH TO 12-INCH TAP ON WATER MAIN

DETAIL W 8
NTS

File: W-8 Trench Requirements for 4-inch to 12-inch Tap on Water Main.dwg

Latest Revision: JANUARY 2017

THE METROPOLITAN DISTRICT
WATER STANDARD DETAILS

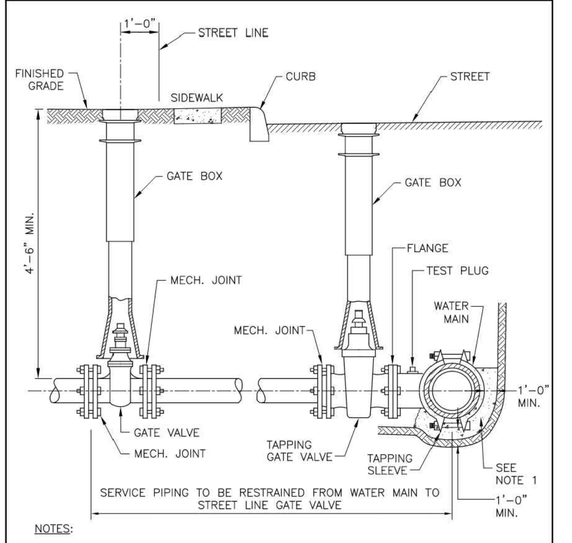

NOTES:

1. POURED CONCRETE THRUST BLOCK TO BE INSTALLED AFTER TAP IS MADE. PROTECT NUTS FROM CONCRETE WITH 6 MIL POLY COVER OR EQUAL.

SERVICES 4-INCH THROUGH 8-INCH

DETAIL W 10
NTS

File: W-10 Services 4-inch Through 8-inch.dwg

Latest Revision: JANUARY 2017

Architecture
Engineering
Environmental
Land Surveying

BL Companies

100 Constitution Plaza
10th Floor
Hartford, CT 06103
(860) 249-2200

STATE OF CONNECTION
TIMOTHY A. VOLZ
31117
LICENSED
PROFESSIONAL ENGINEER

PROPOSED MANUFACTURING / INDUSTRIAL DEVELOPMENT
50-58 RAINBOW ROAD
EAST GRANBY, CONNECTICUT 06026

REVISIONS
No. Date Desc.

Designed	M.A.G
Drawn	M.A.G
Reviewed	
Scale	NONE
Project No.	2300888
Date	06/03/2025
CAD File: DN230088801	

Title
DETAILS

Sheet No.
DN-7

Xref (s) : B0230088801

© 2025 BL COMPANIES, INC. THESE DRAWINGS SHALL NOT BE UTILIZED BY ANY PERSON, FIRM OR CORPORATION WITHOUT THE SPECIFIC WRITTEN PERMISSION OF BL COMPANIES.

THE METROPOLITAN DISTRICT
WATER STANDARD DETAILS

MDC

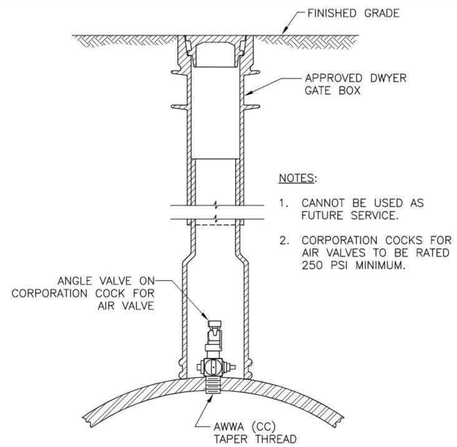

MAIN SIZE	MIN. SIZE AIR VALVE	CORPORATION COCK	ANGLE VALVE SIZE
6"–12"	¾"	¾" x 1"	1"
16" & 20"	1"	1" x 1"	1"
24" & 30"	1–¼"	1–¼" x 1–½"	1–½"
36" & 42"	1–½"	1–½" x 2"	2"
48" & 54"	2"	2" x 2"	2"

STANDARD AIR VALVE

DETAIL W 41

NTS

File: W-41 Standard Air Valve.dwg

Latest Revision: JANUARY 2017

THE METROPOLITAN DISTRICT
WATER STANDARD DETAILS

MDC

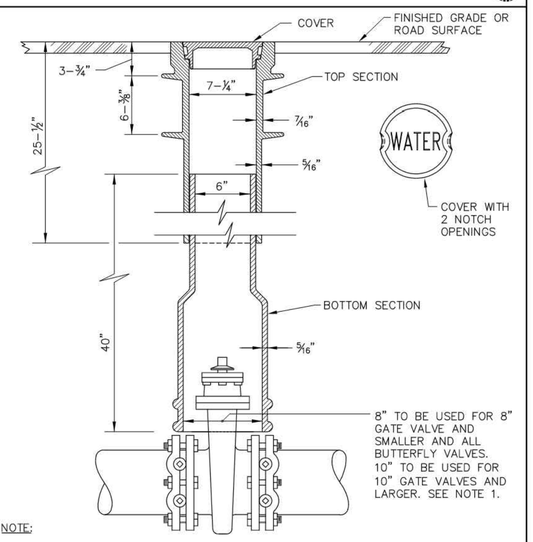

NOTE:

1. THE GATE BOX SHALL BE SET PLUMB AND CENTERED DIRECTLY OVER THE OPERATING NUT OF THE VALVE. THE CONTRACTOR SHALL USE A COMMERCIALLY AVAILABLE CENTERING DEVICE TO PREVENT DAMAGE TO THE TOP OF THE VALVE AND MAINTAIN ALIGNMENT.

STANDARD GATE BOX ASSEMBLY (DWYER TYPE)

DETAIL W 13

NTS

File: W-13 Standard Gate Box Assembly (Dwyer Type).dwg

Latest Revision: JANUARY 2017

THE METROPOLITAN DISTRICT
WATER STANDARD DETAILS

MDC

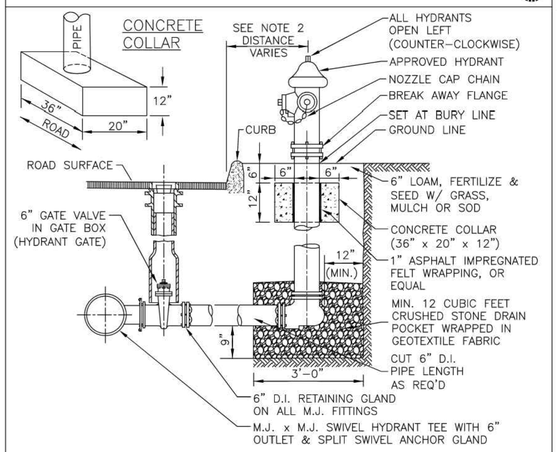

NOTES:

1. INSTALL 6" WIDE UNDERGROUND WARNING TAPE (NON–DETECTABLE) 2–FT ABOVE LENGTH OF HYDRANT BRANCH.
2. DISTANCE SHALL BE 3'± IN BLOOMFIELD, FARMINGTON AND GLASTONBURY AND 2'± IN OTHER MEMBER TOWNS.
3. OFFSET HYDRANT LATERAL AS NECESSARY WHILE MAINTAINING MINIMUM 4.5 FEET OF COVER TO SET FIRE HYDRANT BURY LINE AT GRADE. FURNISH AND INSTALL EXTENSIONS AS NECESSARY ONLY IF A LATERAL OFFSET IS NOT POSSIBLE.

STANDARD FIRE HYDRANT ASSEMBLY

DETAIL W 22

NTS

File: W-22 Standard Fire Hydrant Assembly revised 3-24-17.dwg

Latest Revision: March 2017

THE METROPOLITAN DISTRICT
WATER STANDARD DETAILS

MDC

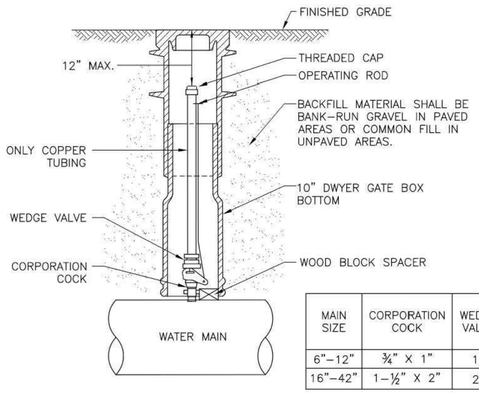

MAIN SIZE	CORPORATION COCK	WEDGE VALVE
6"–12"	¾" X 1"	1"
16"–42"	1–½" X 2"	2"

NOTES:

1. CANNOT BE USED FOR FUTURE SERVICE.
2. A CHLORINATION/SAMPLING ASSEMBLY SHALL BE REMOVED ONCE WATER MAIN PASSES SAMPLING. CORPORATION SHALL EITHER BE CONVERTED TO AIR VALVE OR ABANDONED PRIOR TO FINAL PAVEMENT RESTORATION.

CHLORINATION INLET / BLOW–OFF

DETAIL W 40

NTS

File: W-40 Chlorination Inlet – Blow-off.dwg

Latest Revision: JANUARY 2017

THE METROPOLITAN DISTRICT
WATER STANDARD DETAILS

MDC

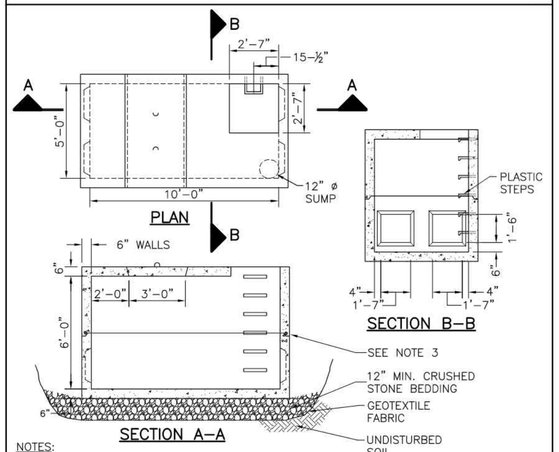

NOTES:

1. BACKFILL MATERIAL SHALL BE BANK–RUN GRAVEL IN PAVED AREAS OR COMMON FILL IN UNPAVED AREAS.
2. CONCRETE STRENGTH SHALL BE MIN. 4,000 P.S.I (28 DAYS). REINFORCING STEEL NOT SHOWN.
3. INSTALL REINFORCED CONCRETE MANHOLE SECTIONS WITH PREFORMED FLEXIBLE JOINT SEALANT OR O–RING RUBBER GASKET.

5' x 10' x 6' PRECAST METER PIT
FOR 4–INCH AND LARGER METERS

DETAIL W 33

NTS

File: W-33 5'x10'x6' Precast Meter Pit For 4-inch and Larger Meters.dwg

Latest Revision: JANUARY 2017

THE METROPOLITAN DISTRICT
WATER STANDARD DETAILS

MDC

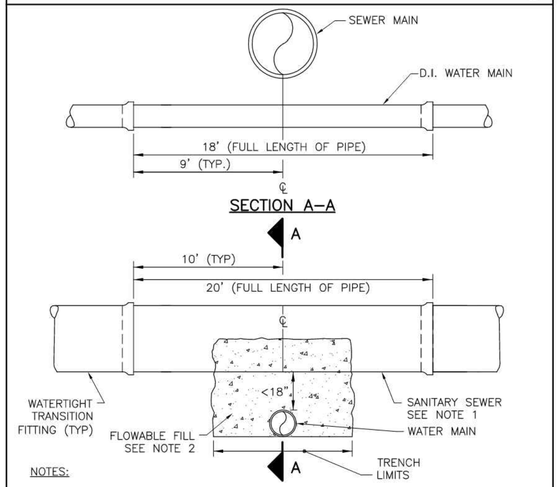

NOTES:

1. SEWER PIPE WITHIN CROSSING LIMITS SHALL BE THE SAME MATERIALS AND WATERTIGHT JOINTS AS NEW WATER MAIN PIPE, CONSTRUCTED IN ACCORDANCE WITH WATER MAIN STANDARDS OF CONSTRUCTION AND PRESSURE TESTED TO ENSURE WATER TIGHTNESS.
2. IF A FULL LENGTH OF WATER PIPE OR SEWER PIPE IS NOT USED, ENCASE SEWER MAIN OR WATER MAIN WITH FLOWABLE FILL WITHIN THE TRENCH LIMITS.

WATER CROSSING BELOW SEWER
LESS THAN 18–INCH VERTICAL SEPARATION

DETAIL W 47

NTS

File: W-47 Water Main Crossing Below Sewer Less than 18 Vertical Separation.dwg

Latest Revision: JANUARY 2017

Architecture
Engineering
Environmental
Land Surveying

BL Companies

100 Constitution Plaza
10th Floor
Hartford, CT 06103
(860) 249-2200

STATE OF CONNECTICUT
TIMOTHY A. VOLZ
38119
LICENSED PROFESSIONAL ENGINEER

PROPOSED MANUFACTURING / INDUSTRIAL DEVELOPMENT
50-58 RAINBOW ROAD
EAST GRANBY, CONNECTICUT 06026

REVISIONS

No.	Date	Desc.

Designed	M.A.G
Drawn	M.A.G
Reviewed	
Scale	NONE
Project No.	2300888
Date	06/03/2025
CAD File: DN230088801	

Title

DETAILS

Sheet No.

DN-8

Xref (s) : B2300888801

© 2025 BL COMPANIES, INC. THESE DRAWINGS SHALL NOT BE UTILIZED BY ANY PERSON, FIRM OR CORPORATION W

AUTODESK PLANTHREE G:\CIVIL\DWG\B\2300888\DWG\DN230088801.DWG 24x36